U-WELL®優偉

本目錄僅供參考，所有產品均以實物為準，本公司保留最終解釋權。

This catalog is for reference only. All products are subject to the actual product. The company reserves the right of final interpretation.

工程專業液壓系統

Engineering hydraulic system

U-WELL®優偉

U-WELL HYDRAULIC TOOS

專業的液壓工具及設備

U-WELL®

U–WELL優偉是專業的液壓產品制造商，專注于，提供廣泛的高端液壓工具及組件，助力設計和維護適用于各種應用場景的液壓動力解決方案。從提升、下降到推拉、彎曲、固定、支撐和扭矩操作，U–WELL優偉產品均以堅固性和多功能性爲核心。產品系列包括工業液壓油缸、液壓泵、液壓拉馬、液壓提升器、法蘭分離器、螺母破切器、扭矩扳手、千斤頂、工具及系統組件。此外，U–WELL優偉還提供圓鋼切斷器、綫纜剪、衝孔器、壓着工具，這一全面的產品組合，可滿足建築、汽車裝配、采礦、造船、制造和工業加工等行業廣泛的工業需求。

以創新設計爲理念，用堅固耐用的材料打造，U–WELL優偉液壓產品能够承受大多數嚴苛工業應用的考驗。

我們堅持”質量至上”的經營哲學。所有產品從毛胚、CNC精密切削到所有制程都經過測試以求安全。使產品質量符合標準後，產品的穩定性贏得客户的信任。我們持續增加產能及擴展產品種類來提供給客户更多樣且高質量的服務。

面對全球市場競争，我們團隊持續研發提高產品質量及產品專業性，在制造過程中運用尖端技術爲客户提供多樣化的服務需求保持全球競争性。

U–WELL優偉不衹是優質的供貨商，也是客户戰略性的優質合作伙伴，提供專業服務來符合您的品質要求。

U-WELL is a professional manufacturer of hydraulic products, specializing in providing a wide range of high-end hydraulic tools and components, assisting in the design and maintenance of hydraulic power solutions suitable for various application scenarios. From lifting and lowering to pushing, pulling, bending, securing, supporting, and torque operations, U-WELL products are centered around robustness and versatility. The product range includes industrial hydraulic cylinders, hydraulic pumps, hydraulic pullers, hydraulic lifters, flange separators, nut cutters, torque wrenches, jacks, tools, and system components. In addition, U-WELL also offers round bar cutters, cable cutters, punchers, and crimping tools. This comprehensive product portfolio meets a wide range of industrial needs in industries such as construction, automotive assembly, mining, shipbuilding, manufacturing, and industrial processing.

With innovative design as its core principle and crafted from sturdy and durable materials, U-WELL hydraulic products are capable of withstanding the rigors of most demanding industrial applications.

We adhere to the business philosophy of "quality first". All products, from raw materials, CNC precision machining, to all manufacturing processes, undergo rigorous testing to ensure safety. Once the product quality meets the standards, its stability earns the trust of our customers. We continuously increase production capacity and expand product categories to provide customers with more diverse and high-quality services.

Facing global market competition, our team continuously strives to enhance product quality and professionalism through research and development. We utilize cutting-edge technologies in the manufacturing process to meet diverse service needs of our customers and maintain global competitiveness.

U-WELL is not only a high-quality supplier, but also a strategic and excellent partner for customers, providing professional services to meet your highest requirements.

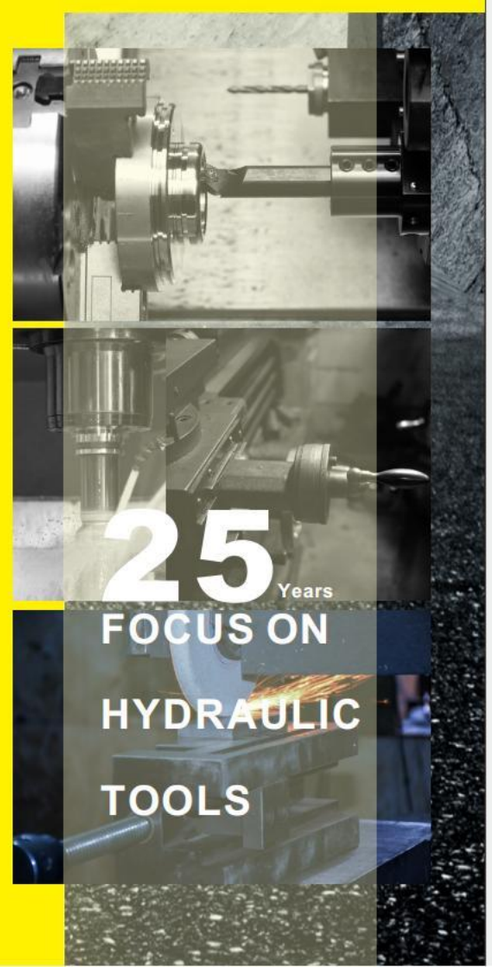

專業液壓工具制造商

Professional Hydraulic Tool Manufacturer

SYSTEM CERTIFICATION ISO 9001:2000 SGS

UKAS ENMRONMENTAL MANAGEMENT

U–WELL對于所做的每個環節都給予品質上的承諾：從原料的購入及客戶的售後服務，并且通過ISO 9001:2000國際認證。
ISO 9001:2000要求承諾管理、執行、產品研發及持續改進的一系列標準化，此認證標章即證明優偉已執行并維持記錄自工廠至客戶，包含檢測、處理、訓練等所有文件。
ISO 9001:2000要求定期內部和外部稽核以確認所有足以影響品質控制的因素得以監控，這些都是無論過去或未來我們對你們的保證。

U-WELL is committed to quality in every aspect of its operations, from raw material procurement to customer after-sales service, and has obtained ISO 9001:2000 international certification.
ISO 9001:2000 requires a series of standardizations in commitment management, execution, product development, and continuous improvement. This certification mark certifies that U-WELL has executed and maintained records from the factory to the customer, including all documents related to testing, processing, training, etc.
ISO 9001:2000 requires regular internal and external audits to confirm that all factors that may affect quality control are being monitored. These are our guarantees to you, both in the past and in the future.

TAF Testing Laboratory

U–WELL油壓缸符合美國機械工程協會（American Society of Mechanical Engineers）ASME E30.1標準：
1.于此型材料降屈服強度下，油壓缸有至少2:1的安全系數；
2.油壓設計爲：
A.于額定荷重110%時，全過程操作次10次以上；
B.于額定荷重150%時，以90%過程操作3次，操作完成後再以荷定重100%及全過程狀態下檢視其功能是否正常，是否有漏油情況。

U-WELL hydraulic cylinder complies with the American Society of Mechanical Engineers ASME E30.1 standard:
At the reduced yield strength of this type of material, the hydraulic cylinder has a safety factor of at least 2:1;
2. The oil pressure design is:
A. At a rated load of 110%, operate the entire process more than 10 times;
B. When the rated load is 150%, operate it three times in a 90% process. After the operation is completed, check whether its function is normal and whether there is oil leakage under the condition of 100% rated load and the entire process.

U-WELL® | 目 錄 Contents

液壓油缸
Hydraulic Cylinders

優偉的液壓油缸有上百種不同的類型，不管是何種工業應用.....提升、推拉、彎曲、支撐.....不管承載能力、行程、長度、或大小限制.....單作用或雙作用，實心或中空柱塞，可以向您保證優偉總有適用于您的高强度應用液壓缸

U-WELL hydraulic cylinders are available in hundreds of different configurations. Whatever the industrial application... lifting, pushing, pulling, bending, holding... whatever the force capacity, stroke length, or size restrictions...single or double-acting, solid or hollow plunger, you can be sure that U-WELL has the cylinder to suit your high force application.

液壓油缸
Hydraulic Cylinders

改善的鞍座防滑力
在頂升作業中，硬化處理的鞍座可保護柱塞端部。其拆卸方便，以接觸柱塞安裝螺紋。

螺紋保護套
保護套可方便的用徒手或帶着手套安裝和拆卸。

易于裝拆
衹需要使用標準的工具便可進行簡單維護。

重型復位彈簧
預緊復位彈簧提升了收縮性能，減少了回程時間。

獨特的GR2軸承系統
長衝程型號的油缸使用GR2軸承系統，以延長使用壽命，降低軸承負載。增大的軸承接觸面積提升了了抗偏載能力，因而大幅提升油缸壽命。

接頭保護帽
接頭防塵帽有新的造型和更柔軟的材質，易于進行推入/拉出作業。保護帽易于徒手或帶着手套安裝和拆卸。

易于拆裝
衹需要使用標準的工具便可進行簡單維護。

Hardened Saddle
prevents plunger from mushrooming and jamming in the top bearing. Snap-in design.

Plunger Wiper
reduces contamination, extending cylinder life.

Golden Ring
absorbs eccentric loading without galling cylinder parts.

Plated Plunger
resists wear and rust.

Golden Ring
absorbs eccentric loading without galling cylinder parts.

Plunger Return Spring
enables fast plunger retraction on single-acting cylinders.

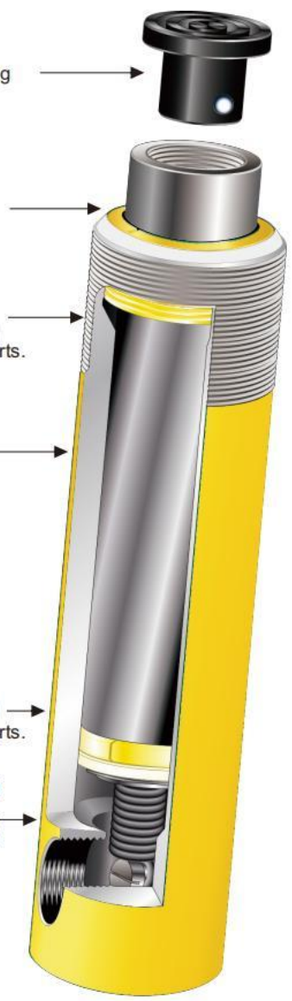

RC–系列，單作用液壓油缸
RC-Series, Single-Acting Cylinders

承載能力: Capacity:	5-95 ton
行程: Stroke:	16-362mm
最大工作壓力: Maximum Operating Pressure:	700 bar

- 外環螺紋、柱塞螺紋和底部安裝孔使得定位方便（對多數型號而言）
- 設計爲在任何安裝位置上使用
- 可拆卸手柄使固定方便（RC–5013,RC–7513和所有95噸型油缸）
- 高强度合金鋼經久耐用
- 多數型號可提供鍍鎳本體
- 高强度復位彈簧
- 烤漆表面耐腐蝕能力更强
- 各型號均包含CR–400快速接頭與防塵帽
- 防塵密封圈可減少污染，延長液壓缸使用壽命
- 獨特的GR2導向環系統上下雙向保護密封件，吸收偏載并延長使用壽命
- 易于組裝和拆卸，僅適用標準的車間工具即可
- 高頻緊力彈簧，加快回縮速度，提高生產力
- 更美觀的螺紋保護套及靈活的插/拔防塵帽，便于佩戴手套或手上粘滿油漬時進行操作

通用型油缸–泵套件–應用廣泛操作便利。
The Industry Standard General Purpose Cylinder

- The exclusive Golden Ring design absorbs eccentric loading without galling cylinder parts
- Collar threads, plunger threads and base mounting holes enable easy fixturing (on most models)
- Designed for use in all positions
- High strength alloy steel for durability
- Nickel plating available on most models (contact U-WELL for details)
- Heavy duty return springs
- Baked enamel finish for increased corrosion resistance
- CR-400 coupler and dust cap included on all models
- Plunger wiper reduces contamination, extending cylinder life.

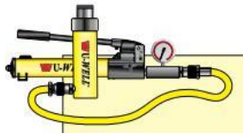

泵和液壓缸套件爲方便您的訂購，所帶*號的液壓缸都可成套供應（包括液壓缸，壓力表，接頭，軟管和泵）。

Cylinder-Pump Sets All cylinders marked with an * are available as sets (cylinder, gauge, couplers, hose and pump) for your ordering convenience.

單作用，通用液壓油缸
Single-Acting, General Purpose Cylinders

▼ **快速選擇表**
完整的技術資料請看下頁。
QUICK SELECTION CHART
For complete technical information see next page.

承載能力 Cylinder Capacity ton (kN)	行程 Stroke (mm)	型號 Model Number	有效面積 Cylinder Effective Area (cm^2)	液壓油容量 Oil Capacity (cm^3)	本體高度 Collapsed Height (mm)	重量 (kg)
5 (45)	16	RC-50**	6.5	10	41	1.0
	25	RC-51	6.5	16	110	1.0
	76	RC-53	6.5	50	165	1.5
	127	RC-55*	6.5	83	215	1.9
	177	RC-57	6.5	115	273	2.4
	232	RC-59	6.5	151	323	2.8
10 (101)	26	RC-101	14.5	38	89	1.8
	54	RC-102*	14.5	78	121	2.3
	105	RC-104	14.5	152	171	3.3
	156	RC-106*	14.5	226	247	4.4
	203	RC-108	14.5	294	298	5.4
	257	RC-1010*	14.5	373	349	6.4
	304	RC-1012	14.5	441	400	6.8
	356	RC-1014	14.5	516	450	8.2
15 (142)	25	RC-151	20.3	51	124	3.3
	51	RC-152	20.3	104	149	4.1
	101	RC-154*	20.3	205	200	5.0
	152	RC-156*	20.3	308	271	6.8
	203	RC-158	20.3	411	322	8.2
	254	RC-1510	20.3	516	373	9.5
	305	RC-1512	20.3	619	423	10.9
	356	RC-1514	20.3	723	474	11.8
25 (232)	26	RC-251	33.2	86	139	5.9
	50	RC-252*	33.2	166	165	6.4
	102	RC-254*	33.2	339	215	8.2
	158	RC-256*	33.2	525	273	10.0
	210	RC-258	33.2	697	323	12.2
	261	RC-2510	33.2	867	374	14.1
	311	RC-2512	33.2	1033	425	16.3
	362	RC-2514*	33.2	1202	476	17.7
30(295)	209	RC-308	42.1	880	387	18.1
50 (498)	51	RC-502	71.2	362	176	15.0
	101	RC-504	71.2	719	227	19.1
	159	RC-506*	71.2	1131	282	23.1
	337	RC-5013	71.2	2399	460	37.6
75 (718)	156	RC-756	102.6	1601	285	29.5
	333	RC-7513	102.6	3417	492	59.0
95 (933)	168	RC-1006	133.3	2239	357	59.0
	260	RC-10010	133.3	3466	449	72.6

*可成套供應，見本頁注釋。
**RC–50液壓缸沒有可拆卸溝槽鞍座和外環螺紋。

* Available as set, see note on this page.
** RC-50 cylinder has a non removable grooved saddle and no collar thread.

考慮安全
制造商標明的負載和行程額定值是最大安全極限值。推薦衹使用這些額定值的80%。

Think Safety
Manufacturer's rating of load and stroke are maximum safe limits. Good practice encourages using only 80% of these ratings.

所有RC系列油缸全部配可拆卸硬質溝槽鞍座。
如需了解傾斜式鞍座或平面鞍座，請參照RC系列配件頁面注釋。

Saddles
All RC cylinders are equipped with hardened removable grooved saddles.
For tilt and flat saddles, see the RC-Series accessory page.

RC–系列，單作用液壓油缸
RC-Series, Single-Acting Cylinders

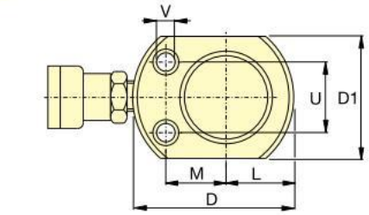

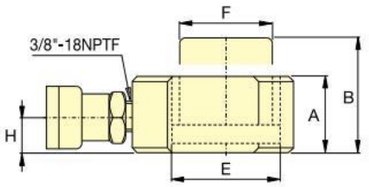

RC-50

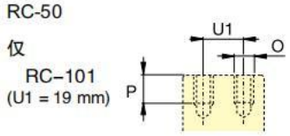

仅
RC–101
(U1 = 19 mm)

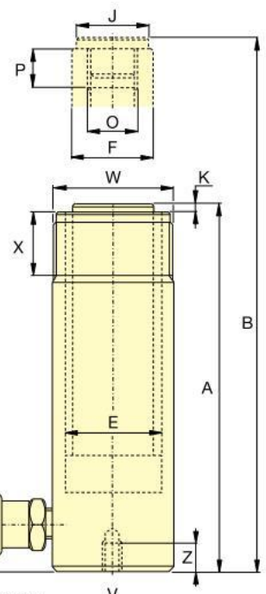

RC-51 - RC-5013

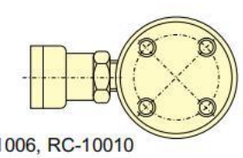

RC-1006, RC-10010

完整的特性信息請參照前頁
For full features see previous page.

承載能力 Cylinder Capacity ton (kN)	行程 Stroke (mm)	型號 Model Number	有效面積 Cylinder Effective (cm^2)	液壓油容量 Oil Capacity (cm^3)	本體高度 Collapsed Height A (mm)	伸展高度 Extended Height B (mm)	外徑 Outside Dia. D (mm)
5 (45)	16	RC-50**	6.5	10	41	57	58***
	25	RC-51	6.5	16	110	135	38
	76	RC-53	6.5	50	165	241	38
	127	RC-55*	6.5	83	215	342	38
	177	RC-57	6.5	115	273	450	38
	232	RC-59	6.5	151	323	555	38
10 (101)	26	RC-101	14.5	38	89	115	57
	54	RC-102*	14.5	78	121	175	57
	105	RC-104	14.5	152	171	276	57
	156	RC-106*	14.5	226	247	403	57
	203	RC-108	14.5	294	298	501	57
	257	RC-1010*	14.5	373	349	606	57
	304	RC-1012	14.5	441	400	704	57
	356	RC-1014	14.5	516	450	806	57
15 (142)	25	RC-151	20.3	51	124	149	69
	51	RC-152	20.3	104	149	200	69
	101	RC-154*	20.3	205	200	301	69
	152	RC-156*	20.3	308	271	423	69
	203	RC-158	20.3	411	322	525	69
	254	RC-1510	20.3	516	373	627	69
	305	RC-1512	20.3	619	423	728	69
	356	RC-1514	20.3	723	474	830	69
25 (232)	26	RC-251	33.2	86	139	165	85
	50	RC-252*	33.2	166	165	215	85
	102	RC-254*	33.2	339	215	317	85
	158	RC-256*	33.2	525	273	431	85
	210	RC-258	33.2	697	323	533	85
	261	RC-2510	33.2	867	374	635	85
	311	RC-2512	33.2	1033	425	736	85
	362	RC-2514*	33.2	1202	476	838	85
30(295)	209	RC-308	42.1	880	387	596	101
50 (498)	51	RC-502	71.2	362	176	227	127
	101	RC-504	71.2	719	227	328	127
	159	RC-506*	71.2	1131	282	441	127
	337	RC-5013	71.2	2399	460	797	127
75 (718)	156	RC-756	102.6	1601	285	441	146
	333	RC-7513	102.6	3417	492	825	146
95 (933)	168	RC-1006	133.3	2239	357	525	177
	260	RC-10010	133.3	3466	449	709	177

*可成套供應，見本頁注釋。
**RC–50液壓缸沒有可拆卸溝槽鞍座和外環螺紋。
***D1=41mm, L=20mm,M=25mm。

單作用，通用液壓油缸
Single-Acting, General Purpose Cylinders

油缸內徑 Cylinder Bore Dia. E (mm)	活塞杆直徑 Plunger Dia. F (mm)	進油口距底部高度 Base to Adv. Port H (mm)	鞍座直徑 Saddle Dia. J (mm)	鞍座凸出高度 Saddle Protr. from Plgr. K (mm)	柱塞內孔螺紋 Plunger Internal Thread O	柱塞螺紋長度 Plunger Thread Length P (mm)	底座安裝孔尺寸 Base Mounting Holes 螺栓分布圓 Bolt Circle U (mm)	螺紋 Thread V	螺紋深度 Thd. Depth Z (mm)	外環螺紋 Collar Thread W	外環螺紋長度 Collar Thread Length X (mm)	重量 (kg)	型號 Model Number
28.7	25.4	19	**	**	**	**	28	5,6 mm	—	—	—	1.0	RC-50**
28.7	25.4	19	25	6	3/4" - 16 UN	14	25	1/4"- 20 UN	14	1 1/2" - 16 UN	28	1.0	RC-51
28.7	25.4	19	25	6	3/4" - 16 UN	14	25	1/4"- 20 UN	14	1 1/2" - 16 UN	28	1.5	RC-53
28.7	25.4	19	25	6	3/4" - 16 UN	14	25	1/4"- 20 UN	14	1 1/2" - 16 UN	28	1.9	RC-55*
28.7	25.4	19	25	6	3/4" - 16 UN	16	25	1/4"- 20 UN	14	1 1/2" - 16 UN	28	2.4	RC-57
28.7	25.4	19	25	6	3/4" - 16 UN	16	25	1/4"- 20 UN	14	1 1/2" - 16 UN	28	2.8	RC-59
42.9	38.1	19	–	–	#10 - 24 UN	6	39	5/16"- 18 UN	12	2 1/4" - 14	26	1.8	RC-101
42.9	38.1	19	35	6	1" - 8 UN	19	39	5/16"- 18 UN	12	2 1/4" - 14 UN	26	2.3	RC-102*
42.9	38.1	19	35	6	1" - 8 UN	19	39	5/16"- 18 UN	12	2 1/4" - 14 UN	26	3.3	RC-104
42.9	38.1	19	35	6	1" - 8 UN	19	39	5/16"- 18 UN	12	2 1/4" - 14 UN	26	4.4	RC-106*
42.9	38.1	19	35	6	1" - 8 UN	19	39	5/16"- 18 UN	12	2 1/4" - 14 UN	26	5.4	RC-108
42.9	38.1	19	35	6	1" - 8 UN	19	39	5/16"- 18 UN	12	2 1/4" - 14 UN	26	6.4	RC-1010*
42.9	38.1	19	35	6	1" - 8 UN	19	39	5/16"- 18 UN	12	2 1/4" - 14 UN	26	6.8	RC-1012
42.9	38.1	19	35	6	1" - 8 UN	19	39	5/16"- 18 UN	12	2 1/4" - 14 UN	26	8.2	RC-1014
50.8	41.4	19	38	9	1" - 8 UN	25	48	3/8"- 16 UN	12	2 3/4" - 16 UN	30	3.3	RC-151
50.8	41.4	19	38	9	1" - 8 UN	22	48	3/8"- 16 UN	12	2 3/4" - 16 UN	30	4.1	RC-152
50.8	41.4	19	38	9	1" - 8 UN	22	48	3/8"- 16 UN	12	2 3/4" - 16 UN	30	5.0	RC-154*
50.8	41.4	25	38	9	1" - 8 UN	25	48	3/8"- 16 UN	12	2 3/4" - 16 UN	30	6.8	RC-156*
50.8	41.4	25	38	9	1" - 8 UN	25	48	3/8"- 16 UN	12	2 3/4" - 16 UN	30	8.2	RC-158
50.8	41.4	25	38	9	1" - 8 UN	25	48	3/8"- 16 UN	12	2 3/4" - 16 UN	30	9.5	RC-1510
50.8	41.4	25	38	9	1" - 8 UN	25	48	3/8"- 16 UN	12	2 3/4" - 16 UN	30	10.9	RC-1512
50.8	41.4	25	38	9	1" - 8 UN	25	48	3/8"- 16 UN	12	2 3/4" - 16 UN	30	11.8	RC-1514
65.0	57.2	25	50	10	1 1/2" - 16 UN	25	58	1/2"- 13 UN	19	3 5/16" - 12 UN	49	5.9	RC-251
65.0	57.2	25	50	10	1 1/2" - 16 UN	25	58	1/2"- 13 UN	19	3 5/16" - 12 UN	49	6.4	RC-252*
65.0	57.2	25	50	10	1 1/2" - 16 UN	25	58	1/2"- 13 UN	19	3 5/16" - 12 UN	49	8.2	RC-254*
65.0	57.2	25	50	10	1 1/2" - 16 UN	25	58	1/2"- 13 UN	19	3 5/16" - 12 UN	49	10.0	RC-256*
65.0	57.2	25	50	10	1 1/2" - 16 UN	25	58	1/2"- 13 UN	19	3 5/16" - 12 UN	49	12.2	RC-258
65.0	57.2	25	50	10	1 1/2" - 16 UN	25	58	1/2"- 13 UN	19	3 5/16" - 12 UN	49	14.1	RC-2510
65.0	57.2	25	50	10	1 1/2" - 16 UN	25	58	1/2"- 13 UN	19	3 5/16" - 12 UN	49	16.3	RC-2512
65.0	57.2	25	50	10	1 1/2" - 16 UN	25	58	1/2"- 13 UN	19	3 5/16" - 12 UN	49	17.7	RC-2514*
73.2	57.2	57	50	10	1 1/2" - 16 UN	25	—	—	—	3 5/16" - 12 UN	49	18.1	RC-308
95.2	79.5	33	71	2	—	—	95	1/2"- 13 UN	19	5" - 12 UN	55	15.0	RC-502
95.2	79.5	33	71	2	—	—	95	1/2"- 13 UN	19	5" - 12 UN	55	19.1	RC-504
95.2	79.5	35	71	2	—	—	95	1/2"- 13 UN	19	5" - 12 UN	55	23.1	RC-506*
95.2	79.5	35	71	2	—	—	95	1/2"- 13 UN	19	5" - 12 UN	55	37.6	RC-5013
114.3	95.2	30	71	5	—	—	—	—	—	5 3/4" - 12 UN	44	29.5	RC-756
114.3	95.2	30	71	5	—	—	—	—	—	5 3/4" - 12 UN	44	59.0	RC-7513
130.3	104.9	41	71	2	—	—	140	3/4"- 10 UN	25	6 7/8"- 12 UN	44	59.0	RC-1006
130.3	104.9	41	71	2	—	—	140	3/4"- 10 UN	25	6 7/8" - 12 UN	44	72.6	RC-10010

* Available as set, see note on this page.
** RC-50 cylinder has a non removable grooved saddle and no collar thread.

RCH–系列，中空柱塞液壓油缸
RCH-Series, Hollow Plunger Cylinders

適用于各類測試、維修以及需要張拉力的應用場合。

Versatility in Testing,Maintenance and Tensioning Applications

承載能力: Capacity:	13-95 ton
行程: Stroke:	8-155 mm
中心孔直徑 : Center Hole Diameter:	19.6-79 mm
最大工作壓力: Maximum Operating Pressure:	700 bar

- 中空柱塞設計既可以用于拉力，有可以用于推力
- 單作用，彈簧回程
- 對于20噸以上的型號，使用鍍鎳的浮動中心管增加產品壽命
- 烤漆表面耐腐蝕能力更强
- 外環螺紋使安裝方便

- Hollow plunger design allows for both, pull and push forces
- Single-acting, spring return
- Nickel-plated, floating center tube on models over 20 ton increases product life
- Baked enamel finish for increased corrosion resistance
- Collar threads for easy fixturing

鞍座

大多数RCH系列油缸配有平滑鞍座,可选螺纹鞍座及所有尺寸信息。

Saddles

Most RCH-Series cylinders are equipped with smooth saddles. See table at next page for optional threaded information.

中空柱塞油缸RCH–1003在噴杆吊架安裝中的運用。
Hollowplunger cylinder RCH-1003 used in an application for intermediate boom suspension on a dragline

承載能力 Cylinder Capacity ton (kN)	行程 Stroke (mm)	型號 Model Number	有效面積 Cyl. Effect. Area (cm^2)	液壓油容量 Oil Cap. (cm^3)
13 (125)	8	RCH-120	17.9	14
	42	RCH-121*	17.9	75
	42	RCH-1211	17.9	75
	76	RCH-123	17.9	136
20 (215)	49	RCH-202*	30.7	150
	155	RCH-206	30.7	476
30 (326)	64	RCH-302*	46.6	298
	155	RCH-306	46.6	722
60 (576)	76	RCH-603*	82.3	626
	153	RCH-606	82.3	1259
95 (931)	76	RCH-1003*	133.0	1011

單作用，中空柱塞液壓油缸
Single-Acting, Hollow Plunger Cylinders

中空鞍座選用表
Optional Heat Treated Hollow Saddles

鞍座類型 Saddle Type	油缸型號 Cylinder Model Number	鞍座型號 Saddle Model Nr.	鞍座尺寸 (mm) Saddle Dimensions (mm) A	B	C
螺紋中空鞍座	RCH-202, 206	HP-2015	53	1"- 8	9
	RCH-302, 306	HP-3015	63	1¼"- 7	9
	RCH-603, 606	HP-5016	91	1⅝"- 5½	12
	RCH-1003	HP-10016	126	2½"- 8	13

對所有的RCH型號（除RCH–120、RCH–1211外）中空光滑鞍座爲標準件。

泵和液壓缸套件爲方便您的訂購，所帶*號的液壓缸都可成套供應（包括液壓缸，壓力表，接頭，軟管和泵）。

Cylinder-Pump Sets All cylinders marked with an * are available as sets (cylinder, gauge, couplers, hose and pump) for your ordering convenience.

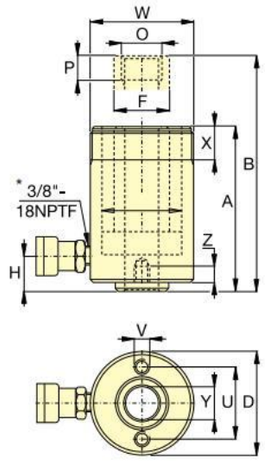

RCH–120到RCH–123型號
RCH-120 to RCH-123 models

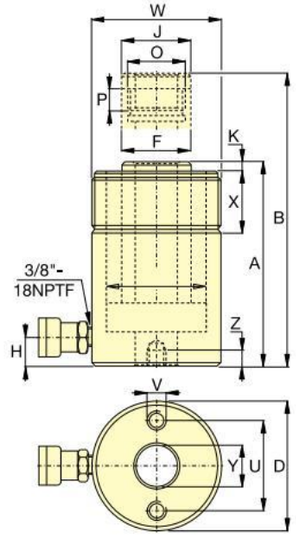

RCH–202到RCH–1003型號
RCH-202 to RCH-1003 models

基座安裝孔尺寸 (mm)
Base Mounting Hole Dimensions (mm)

型號 Model Number	螺栓分布圓 Bolt Circle U	螺紋 Thread V	螺紋深度 Thread Depth Z
RCH-120	50.8	5/16"- 18 UNC	9.0
RCH-121	–	–	–
RCH-1211	–	–	–
RCH-123	50.8	5/16"- 18 UNC	12.7
RCH-202	82.6	3/8"- 16 UNC	9.4
RCH-206	82.6	3/8"- 16 UNC	9.4
RCH-302	92.2	3/8"- 16 UNC	14.0
RCH-306	92.2	3/8"- 16 UNC	14.0
RCH-603	130.3	½"- 13 UNC	14.0
RCH-606	130.3	½"- 13 UNC	14.0
RCH-1003	177.8	5/8"- 11 UNC	19.0

本體高度 Coll. Height A (mm)	伸展高度 Ext. Height B (mm)	外徑 Out. Dia. D (mm)	油缸內徑 Cyl. Bore Dia. E (mm)	柱塞直徑 Plgr. Dia. F (mm)	進油口距底部高度 Cyl. Base to Advance Port H (mm)	鞍座直徑 Saddle Dia. J (mm)	鞍座凸出高度 Saddle Protrusion from Plgr. K (mm)	柱塞內螺紋 Plunger Internal Thread O	柱塞螺紋長度 Plunger Thread Length P (mm)	外環螺紋 Collar Thread W	外環螺紋長度 Collar Thread Length X (mm)	中心孔徑 Center Hole Dia. Y (mm)	重量 (kg)	型號 Model Number
55	63	69	54.1	35.1	9	–	–	¾" -16 UN	16	2¾" -16	30	19.6	1.5	RCH-120
120	162	69	54.1	35.1	25	–	–	–	–	2¾" -16	30	19.6	2.8	RCH-121*
120	162	69	54.1	35.1	25	–	–	¾" -16 UN	16	2¾" -16	30	19.6	2.8	RCH-1211
184	260	69	54.1	35.1	25	–	–	–	–	2¾" -16	30	19.6	4.4	RCH-123
162	211	98	73.1	54.1	19	54	9.7	1 9/16" -16 UN	19	3⅞" -12	38	26.9	7.7	RCH-202*
306	461	98	73.1	54.1	25	54	9.7	1 9/16" -16 UN	19	3⅞" -12	38	26.9	14.1	RCH-206
178	242	114	88.9	63.5	21	63	9.0	1 13/16" -16 UN	22	4½" -12	42	33.3	10.9	RCH-302*
330	485	114	88.9	63.5	25	63	9.0	1 13/16" -16 UN	22	4½" -12	42	33.3	21.8	RCH-306
247	323	159	123.9	91.9	31	91	12.0	2¾" -16 UN	19	6¼" -12	48	53.8	28.1	RCH-603*
323	476	159	123.9	91.9	31	91	12.0	2¾" -16 UN	19	6¼" -12	48	53.8	35.4	RCH-606
254	330	212	165.1	127.0	38	126	12.0	4" -16 UN	25	8⅜" -12	60	79.0	63.0	RCH-1003*

CLL–系列，自鎖式液壓油缸
CLL-Series, Lock Nut Cylinders

機械式螺母鎖定使負載更安全
To Secure Loads Mechanically

承載能力: Capacity:	50-1000 ton
行程: Stroke:	50-300mm
最大工作壓力: Maximum Operating Pressure:	700 bar

- 單作用，負載回縮
- 螺母鎖定使負載更安全
- 特殊復合材料塗層使耐腐蝕能力更强，使操作摩擦力更小
- 可承受的偏載達液壓油缸額定承載能力的5%
- 溢流孔兼有限制行程的功能
- 可互換的硬質溝槽鞍座爲標準配置

- Single-acting, load return
- Safety Lock Nut for mechanical load holding
- Special synthetic coating for improved corrosion resistance and lower friction for smoother operation
- Overflow port functions as a stroke limiter
- Interchangeable, hardened grooved saddles are standard

在這一立交橋中，CLL油缸用來支撐混凝土梁，調平支座并將4000噸的滑動軸承置于橋墩與支座中間。

For this curved bridge, CLL-cylinders were used to support the concrete beams, to level the pierhead and to place 4000 ton slide bearings between pier and pierhead.

CLL cylinder, mechanically locked, after positioning the curved bridge.

單作用，螺母鎖定液壓油缸
Single-Acting, Lock Nut Cylinders

▼快速選擇表
完整的技術信息請參見下頁。
QUICK SELECTION CHART
For complete technical information see next page.

承載能力 Cylinder Capacity ton (kN)	行程 Stroke (mm)	型號 Model Number	有效面積 Cylinder Effective Area (cm^2)	液壓油容量 Oil Capacity (cm^3)	本體高度 Collapsed Height (mm)	重量 (kg)
50 (496)	50	CLL-502	70.9	355	164	15
	100	CLL-504	70.9	709	214	20
	150	CLL-506	70.9	1064	264	25
	200	CLL-508	70.9	1418	314	30
	250	CLL-5010	70.9	1773	364	35
	300	CLL-5012	70.9	2127	414	40
100 (929)	50	CLL-1002	132.7	664	187	30
	100	CLL-1004	132.7	1327	237	39
	150	CLL-1006	132.7	1991	287	48
	200	CLL-1008	132.7	2654	337	56
	250	CLL-10010	132.7	3318	387	64
	300	CLL-10012	132.7	3981	437	73
150 (1390)	50	CLL-1502	198.6	993	209	53
	100	CLL-1504	198.6	1986	259	66
	150	CLL-1506	198.6	2979	309	78
	200	CLL-1508	198.6	3972	359	92
	250	CLL-15010	198.6	4965	409	104
	300	CLL-15012	198.6	5958	459	117
200 (1859)	50	CLL-2002	265.6	1330	243	83
	150	CLL-2006	265.6	3989	343	117
	300	CLL-20012	265.6	7995	493	170
250 (2562)	50	CLL-2502	366.1	1832	249	116
	150	CLL-2506	366.1	5496	349	162
	300	CLL-25012	366.1	10995	499	234
300 (3193)	50	CLL-3002	456.2	2281	295	173
	150	CLL-3006	456.2	6843	395	233
	300	CLL-30012	456.2	13740	545	323
400 (3919)	50	CLL-4002	559.9	2800	335	250
	150	CLL-4006	559.9	8399	435	327
	300	CLL-40012	559.9	16800	585	441
500 (5118)	50	CLL-5002	731.1	3653	375	367
	150	CLL-5006	731.1	10959	475	466
	300	CLL-50012	731.1	21930	625	617
600 (5983)	50	CLL-6002	854.8	4277	395	446
	150	CLL-6006	854.8	12830	495	562
	300	CLL-60012	854.8	25650	645	737
800 (8238)	50	CLL-8002	1176.9	5882	455	709
	150	CLL-8006	1176.9	17645	555	870
	300	CLL-80012	1176.9	35370	705	1110
1000 (10260)	50	CLL-10002	1466.4	7329	495	949
	150	CLL-10006	1466.4	21986	595	1141
	300	CLL-100012	1466,4	43980	745	1430

鞍座
所有CLL系列油缸配有螺栓固定可拆卸鞍座，如需其它傾斜式鞍座資料，請參看選擇表。

Saddles
All CLL cylinders are equipped with bolt-on removable grooved saddles.
For information on optional tilt saddles, see selection chart at next page.

CLL–系列，自鎖式液壓油缸
CLL-Series, Lock Nut Cylinders

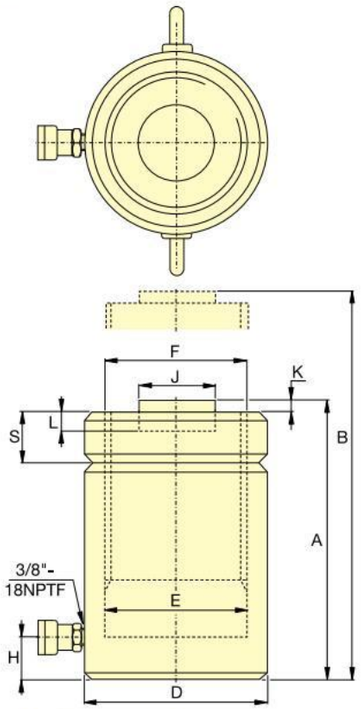

CLL-502 - CLL-25012

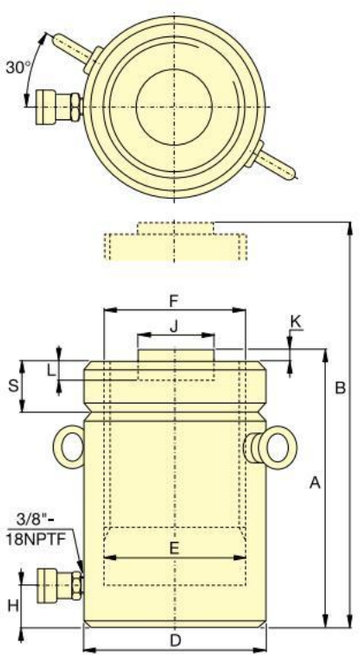

CLL-3002 - CLL-100012

承載能力 Cylinder Capacity ton (kN)	行程 Stroke (mm)	型號 Model Number	有效面積 Cylinder Effective Area (cm^2)	液壓油容量 Oil Capacity (cm^3)
50 (496)	50	CLL-502	70.9	355
	100	CLL-504	70.9	709
	150	CLL-506	70.9	1064
	200	CLL-508	70.9	1418
	250	CLL-5010	70.9	1773
	300	CLL-5012	70.9	2127
100 (929)	50	CLL-1002	132.7	664
	100	CLL-1004	132.7	1327
	150	CLL-1006	132.7	1991
	200	CLL-1008	132.7	2654
	250	CLL-10010	132.7	3318
	300	CLL-10012	132.7	3981
150 (1390)	50	CLL-1502	198.6	993
	100	CLL-1504	198.6	1986
	150	CLL-1506	198.6	2979
	200	CLL-1508	198.6	3972
	250	CLL-15010	198.6	4965
	300	CLL-15012	198.6	5958
200 (1859)	50	CLL-2002	265.6	1330
	150	CLL-2006	265.6	3989
	300	CLL-20012	265.6	7995
250 (2562)	50	CLL-2502	366.1	1832
	150	CLL-2506	366.1	5496
	300	CLL-25012	366.1	10995
300 (3193)	50	CLL-3002	456.2	2281
	150	CLL-3006	456.2	6843
	300	CLL-30012	456.2	13740
400 (3919)	50	CLL-4002	559.9	2800
	150	CLL-4006	559.9	8399
	300	CLL-40012	559.9	16800
500 (5118)	50	CLL-5002	731.1	3653
	150	CLL-5006	731.1	10959
	300	CLL-50012	731.1	21930
600 (5983)	50	CLL-6002	854.8	4277
	150	CLL-6006	854.8	12830
	300	CLL-60012	854.8	25650
800 (8238)	50	CLL-8002	1176.9	5882
	150	CLL-8006	1176.9	17645
	300	CLL-80012	1176.9	35370
1000 (10260)	50	CLL-10002	1466.4	7329
	150	CLL-10006	1466.4	21986
	300	CLL-100012	1466.4	43980

單作用，自鎖式液壓油缸
Single-Acting, Lock Nut Cylinders

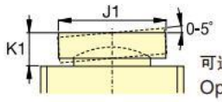

可选择倾斜式鞍座 *
Optional Tilt Saddle *

本體高度 Coll. Height A (mm)	伸展高度 Ext. Height B (mm)	外徑 Outs. Dia. D (mm)	油缸內徑 Cyl. Bore Dia. E (mm)	柱塞直徑（螺紋） Plunger Dia. (threaded) F (mm)	進油口距底部高度 Base to Adv. Port H (mm)	標準鞍座直徑 Standard Saddle Dia. J (mm)	鞍座凸出高度 Saddle Protr. from Plgr. K (mm)	柱塞孔深度 Depth of Plunger Hole L (mm)	鎖定螺母高度 Lock-nut Height S (mm)	重量 (kg)	型號 Model Number	* 可選傾斜式鞍座 * Optional Tilt Saddle 鞍座直徑 Saddle Dia. J1 (mm)	鞍座高度 Saddle Height K1 (mm)	鞍座型號 Saddle Model Number
164	214	125	95.0	Tr 95 x 4	30	71	2	13	36	15	CLL-502	71	24	CAT-100
214	314	125	95.0	Tr 95 x 4	30	71	2	13	36	20	CLL-504	71	24	CAT-100
264	414	125	95.0	Tr 95 x 4	30	71	2	13	36	25	CLL-506	71	24	CAT-100
314	514	125	95.0	Tr 95 x 4	30	71	2	13	36	30	CLL-508	71	24	CAT-100
364	614	125	95.0	Tr 95 x 4	30	71	2	13	36	35	CLL-5010	71	24	CAT-100
414	714	125	95.0	Tr 95 x 4	30	71	2	13	36	40	CLL-5012	71	24	CAT-100
187	237	165	130.0	Tr 130 x 6	30	71	2	13	44	30	CLL-1002	71	24	CAT-100
237	337	165	130.0	Tr 130 x 6	30	71	2	13	44	39	CLL-1004	71	24	CAT-100
287	437	165	130.0	Tr 130 x 6	30	71	2	13	44	48	CLL-1006	71	24	CAT-100
337	537	165	130.0	Tr 130 x 6	30	71	2	13	44	56	CLL-1008	71	24	CAT-100
387	637	165	130.0	Tr 130 x 6	30	71	2	13	44	64	CLL-10010	71	24	CAT-100
437	737	165	130.0	Tr 130 x 6	30	71	2	13	44	73	CLL-10012	71	24	CAT-100
209	259	205	159.0	Tr 159 x 6	39	130	2	25	44	53	CLL-1502	130	20	CAT-200
259	359	205	159.0	Tr 159 x 6	39	130	2	25	44	66	CLL-1504	130	20	CAT-200
309	459	205	159.0	Tr 159 x 6	39	130	2	25	44	78	CLL-1506	130	20	CAT-200
359	559	205	159.0	Tr 159 x 6	39	130	2	25	44	92	CLL-1508	130	20	CAT-200
409	659	205	159.0	Tr 159 x 6	39	130	2	25	44	104	CLL-15010	130	20	CAT-200
459	759	205	159.0	Tr 159 x 6	39	130	2	25	44	117	CLL-15012	130	20	CAT-200
243	293	235	184.0	Tr 184 x 6	50	130	2	25	50	83	CLL-2002	130	20	CAT-200
343	493	235	184.0	Tr 184 x 6	50	130	2	25	50	117	CLL-2006	130	20	CAT-200
493	793	235	184.0	Tr 184 x 6	50	130	2	25	50	170	CLL-20012	130	20	CAT-200
249	299	275	216.0	Tr 216 x 6	50	150	2	25	56	116	CLL-2502	150	21	CAT-250
349	499	275	216.0	Tr 216 x 6	50	150	2	25	56	162	CLL-2506	150	21	CAT-250
499	799	275	216.0	Tr 216 x 6	50	150	2	25	56	234	CLL-25012	150	21	CAT-250
295	345	310	241.0	Tr 241 x 6	59	139	5	25	60	173	CLL-3002	195	75	CAT-300
395	545	310	241.0	Tr 241 x 6	59	139	5	25	60	233	CLL-3006	195	75	CAT-300
545	845	310	241.0	Tr 241 x 6	59	139	5	25	60	323	CLL-30012	195	75	CAT-300
335	385	350	267.0	Tr 266 x 6	70	159	5	25	70	250	CLL-4002	225	85	CAT-400
435	585	350	267.0	Tr 266 x 6	70	159	5	25	70	327	CLL-4006	225	85	CAT-400
585	885	350	267.0	Tr 266 x 6	70	159	5	25	70	441	CLL-40012	225	85	CAT-400
375	425	400	305.0	Tr 305 x 6	80	179	5	25	80	367	CLL-5002	250	91	CAT-500
475	625	400	305.0	Tr 305 x 6	80	179	5	25	80	466	CLL-5006	250	91	CAT-500
625	925	400	305.0	Tr 305 x 6	80	179	5	25	80	617	CLL-50012	250	91	CAT-500
395	445	430	330.0	Tr 330 x 6	85	194	5	25	85	446	CLL-6002	275	96	CAT-600
495	645	430	330.0	Tr 330 x 6	85	194	5	25	85	562	CLL-6006	275	96	CAT-600
645	945	430	330.0	Tr 330 x 6	85	194	5	25	85	737	CLL-60012	275	96	CAT-600
455	505	505	387.0	Tr 387 x 6	100	224	5	25	100	709	CLL-8002	320	123	CAT-800
555	705	505	387.0	Tr 387 x 6	100	224	5	25	100	870	CLL-8006	320	123	CAT-800
705	1005	505	387.0	Tr 387 x 6	100	224	5	25	100	1110	CLL-80012	320	123	CAT-800
495	545	560	432.0	Tr 432 x 6	110	249	5	25	110	949	CLL-10002	360	136	CAT-1000
595	745	560	432.0	Tr 432 x 6	110	249	5	25	110	1141	CLL-10006	360	136	CAT-1000
745	1045	560	432.0	Tr 432 x 6	110	249	5	25	110	1430	CLL-100012	360	136	CAT-1000

CLP–系列，薄型螺母鎖定液壓油缸
CLP-Series, Pancake Lock Nut Cylinders

最薄的頂升工具
The Shortest Power Lifter

承載能力: Capacity:	60-520 ton
行程: Stroke:	45-50mm
最大工作壓力: Maximum Operating Pressure:	700 bar

- 超薄油缸適合在緊湊的結構中應用
- 安全的螺母鎖定設計適合機械負載支撐
- 單作用，負載回程
- 特殊的復合材料鍍層，用以增加抗腐蝕及減少磨擦，運動靈活，
- 可承受額定載荷3%的偏載而不會產生擠壓損傷
- 溢流孔兼有限制行程的功能

- Extremely low height for use in confined areas
- Lock nut for positive and safe mechanical load holding over a long period of time
- Single-acting, load return
- Optional special synthetic coating for improved corrosion resistance and lower friction for smoother operation
- Overflow port functions as a stroke limiter

▼ 祇有薄型CLP–油缸才適合在這樣狹小的空間中進行頂升工作。
Only the extreme low height CLP-cylinder fits in this confined area to lift the construction.

承載能力 Cylinder Capacity ton (kN)	行程 Stroke (mm)	型號 * Model Number*	有效面積 Cylinder Effective Area (cm^2)	液壓油容量 Oil Capacity (cm^3)
60 (606)	50	CLP-602	86.6	432
100 (1027)	50	CLP-1002	146.8	734
160 (1619)	45	CLP-1602	231.3	1040
200 (1999)	45	CLP-2002	285.6	1285
260 (2567)	45	CLP-2502	366.8	1650
400 (3916)	45	CLP-4002	559.5	2517
520 (5114)	45	CLP-5002	730.6	3287

單作用，薄型螺母鎖定液壓油缸
Single-Acting, Pancake Lock Nut Cylinders

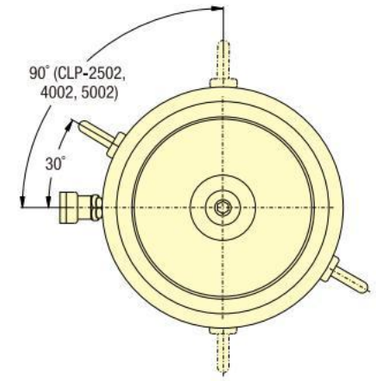

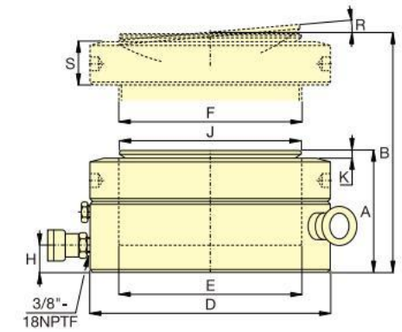

傾斜式鞍座
所有CLP系列液壓油缸包含最大傾斜度爲5°的整體式傾斜鞍座。

Tilt Saddles
All CLP-Series cylinders include integral tilt saddles with maximum tilt angles up to 5°.

爲了正確操作，所有CLP系列油缸需與堅固的頂升表面連接。如在沙質的，泥土的或鬆動的表面中使用薄型油缸會導致油缸損壞。

Cylinders Require A Solid Lifting Surface For Correct Support.Use Of Pancake Cylinders On Surfaces Such As Sand, Mud Or Dirt, May Result In Cylinder Damage!

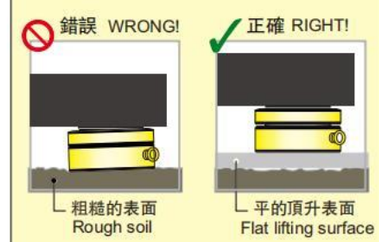

本體高度 Collapsed Height A (mm)	伸展高度 Extended Height B (mm)	外徑 Outside Diameter D (mm)	油缸內徑 Cylinder Bore Diameter E (mm)	柱塞直徑 Plunger Diameter F (mm)	進油口距底部高度 Base to Advance Port H (mm)	鞍座直徑 Saddle Diameter J (mm)	鞍座凸出高度 Saddle Protrusion from Plgr. K (mm)	鞍座最大傾斜度 Saddle Max. Tilt Angle R	自鎖螺母高度 Lock Nut Height S (mm)	重量 (kg)	型號 Model Number*
125	175	140	105.0	Tr 104 x 4	19	96	6	5°	28	15	CLP-602
137	187	175	136.7	Tr 136 x 6	21	126	8	5°	31	26	CLP-1002
148	193	220	171.6	Tr 171 x 6	27	160	9	5°	40	44	CLP-1602
155	200	245	190.7	Tr 190 x 6	30	180	10	5°	43	57	CLP-2002
159	204	275	216.1	Tr 216 x 6	32	200	11	5°	44	74	CLP-2502
178	223	350	266.9	Tr 266 x 6	39	250	11	4°	55	134	CLP-4002
192	237	400	305.0	Tr 305 x 6	48	290	10	3°	62	189	CLP-5002

CLSG–系列，大噸位液壓油缸
CLSG-Series, High Tonnage Cylinders

配有一體式擋圈單作用
大噸位頂升的解决方法

The Single-Acting Heavy Lifting Solution with Integral Stop Ring

承載能力: Capacity:	50-1000 ton
行程: Stroke:	50-300mm
最大工作壓力: Maximum Operating Pressure:	700 bar

- 一體式擋圈防止柱塞過度伸出
- 烤漆表面提供更强的抗腐蝕能力
- 獨特的承載設計，可承受油缸承載能力10%的側向載荷而不會損壞油缸
- 可互換的硬質溝槽鞍座爲標準件
- 所有型號都有標準的地步安裝孔
- 防塵圈減少污染，延長液壓缸使用壽命
- 單作用，負載回程

- Integral stop ring provides piston blow-out protection
- Baked enamel outside finish and plated pistons provide superior corrosion protection
- Interchangeable, hardened grooved saddles are standard
- Base mounting holes are standard on all models
- Plunger wiper reduces contamination,extending cylinder life
- Single-acting, load return.

單作用，大噸位液壓油缸
Single-Acting, High Tonnage Cylinders

▼快速選擇表
完整的技術信息請參看下文。
QUICK SELECTION CHART
For complete technical information see next page.

承載能力 Cylinder Capacity ton (kN)	形成 Stroke (mm)	型號 Model Number	有效面積 Cylinder Effective Area (cm^2)	液壓油容量 Oil Capacity (cm^3)	本體高度 Collapsed Height (mm)	重量 (kg)
50 (539)	50	CLSG-502	77.0	385	162	17
	100	CLSG-504	77.0	770	212	20
	150	CLSG-506	77.0	1155	262	23
	200	CLSG-508	77.0	1540	312	27
	250	CLSG-5010	77.0	1924	362	31
	300	CLSG-5012	77.0	2309	412	34
100 (929)	50	CLSG-1002	132.7	664	182	19
	100	CLSG-1004	132.7	1327	232	29
	150	CLSG-1006	132.7	1991	282	40
	200	CLSG-1008	132.7	2655	332	50
	250	CLSG-10010	132.7	3318	382	61
	300	CLSG-10012	132.7	3982	432	71
150 (1390)	50	CLSG-1502	198.6	993	196	39
	100	CLSG-1504	198.6	1986	246	52
	150	CLSG-1506	198.6	2978	296	65
	200	CLSG-1508	198.6	3971	346	78
	250	CLSG-15010	198.6	4964	396	92
	300	CLSG-15012	198.6	5957	446	105
200 (1861)	50	CLSG-2002	265.9	1330	216	55
	150	CLSG-2006	265.9	3989	316	91
	300	CLSG-20012	265.9	7977	466	146
250 (2565)	50	CLSG-2502	366.4	1832	235	102
	150	CLSG-2506	366.4	5497	335	136
	300	CLSG-25012	366.4	10993	485	207
300 (3193)	50	CLSG-3002	456.2	2281	312	184
	150	CLSG-3006	456.2	6843	412	232
	300	CLSG-30012	456.2	13685	562	303
400 (3919)	50	CLSG-4002	559.9	2800	375	270
	150	CLSG-4006	559.9	8399	475	330
	300	CLSG-40012	559.9	16797	625	421
500 (5114)	50	CLSG-5002	730.6	3653	419	401
	150	CLSG-5006	730.6	10959	519	480
	300	CLSG-50012	730.6	21918	669	599
600 (5987)	50	CLSG-6002	855.3	4276	429	474
	150	CLSG-6006	855.3	12829	529	565
	300	CLSG-60012	855.3	25659	679	701
800 (8234)	50	CLSG-8002	1176.3	5881	474	741
	150	CLSG-8006	1176.3	17644	574	880
	300	CLSG-80012	1176.3	35288	724	1058
1000 (10260)	50	CLSG-10002	1465.7	7329	564	1062
	150	CLSG-10006	1465.7	21986	664	1213
	300	CLSG-100012	1465.7	43972	814	1439

鞍座
所有CLSG系列油缸配有螺栓固定可拆卸鞍座，如需其它傾斜式鞍座資料，請參看選擇表。

Saddles
All CLSG-Series cylinders are equipped with bolt-on removable grooved saddles. For information on optional tilt saddles, see selection chart.

標準性能
- 可互換的硬質溝槽鞍座
- 頂部與側面安裝有吊耳

Standard Features
- Interchangeable, hardened grooved saddles
- Top and side mounted lifting eye capability

Base Mounting Hole [1] Dimensions (mm)
底部安裝孔尺寸 (mm)

型號/承載能力 Model / Capacity ton	螺栓分布圓 Bolt Circle U	螺紋尺寸 Thread Size V	最小螺紋深度 Min. Thread Depth Z
CLSG-50	65	2x M12	22
CLSG-100	95	2x M12	22
CLSG-150	130	2x M12	22
CLSG-200	165	3x M12	22
CLSG-250	190	3x M12	22
CLSG-300	180	3x M16	30
CLSG-400	205	3x M16	30
CLSG-500	250	3x M24	36
CLSG-600	275	3x M24	36
CLSG-800	330	3x M24	36
CLSG-1000	375	3x M24	36

CLSG–系列，大噸位液壓油缸
CLSG-Series, High Tonnage Cylinders

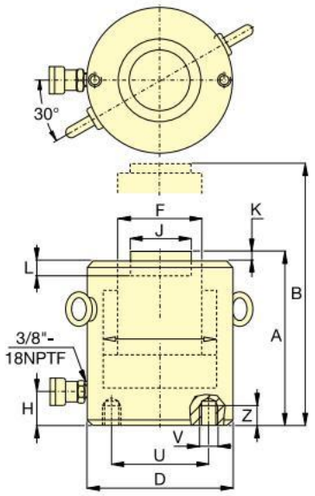

CLSG-502 - CLSG-15012

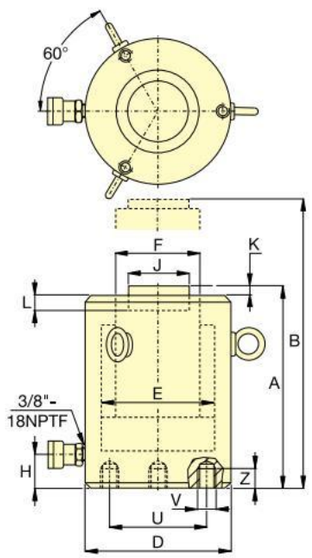

CLSG-2002 - CLSG-100012

完整信息見前頁。
For full features see previous page.

承載能力 Cylinder Capacity ton (kN)	行程 Stroke (mm)	型號 Model Number	有效面積 Cylinder Effective Area (cm^2)	液壓油容量 Oil Capacity (cm^3)
50 (539)	50	CLSG-502	77.0	385
	100	CLSG-504	77.0	770
	150	CLSG-506	77.0	1155
	200	CLSG-508	77.0	1540
	250	CLSG-5010	77.0	1924
	300	CLSG-5012	77.0	2309
100 (929)	50	CLSG-1002	132.7	664
	100	CLSG-1004	132.7	1327
	150	CLSG-1006	132.7	1991
	200	CLSG-1008	132.7	2655
	250	CLSG-10010	132.7	3318
	300	CLSG-10012	132.7	3982
150 (1390)	50	CLSG-1502	198.6	993
	100	CLSG-1504	198.6	1986
	150	CLSG-1506	198.6	2978
	200	CLSG-1508	198.6	3971
	250	CLSG-15010	198.6	4964
	300	CLSG-15012	198.6	5957
200 (1861)	50	CLSG-2002	265.9	1330
	150	CLSG-2006	265.9	3989
	300	CLSG-20012	265.9	7977
250 (2565)	50	CLSG-2502	366.4	1832
	150	CLSG-2506	366.4	5497
	300	CLSG-25012	366.4	10993
300 (3193)	50	CLSG-3002	456.2	2281
	150	CLSG-3006	456.2	6843
	300	CLSG-30012	456.2	13685
400 (3919)	50	CLSG-4002	559.9	2800
	150	CLSG-4006	559.9	8399
	300	CLSG-40012	559.9	16797
500 (5114)	50	CLSG-5002	730.6	3653
	150	CLSG-5006	730.6	10959
	300	CLSG-50012	730.6	21918
600 (5987)	50	CLSG-6002	855.3	4276
	150	CLSG-6006	855.3	12829
	300	CLSG-60012	855.3	25659
800 (8234)	50	CLSG-8002	1176.3	5881
	150	CLSG-8006	1176.3	17644
	300	CLSG-80012	1176.3	35288
1000 (10260)	50	CLSG-10002	1465.7	7329
	150	CLSG-10006	1465.7	21986
	300	CLSG-100012	1465.7	43972

單作用，大噸位液壓油缸
Single-Acting, High Tonnage Cylinders

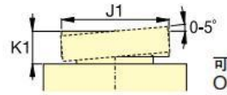

可選配傾斜式鞍座 *
Optional Tilt Saddle *

本體高度 Collapsed Height A (mm)	伸展高度 Extended Height B (mm)	油缸外徑 Outside Dia. D (mm)	油缸內徑 Cylinder Bore Dia. E (mm)	柱塞直徑 Plunger Dia. F (mm)	進油口距底部高度 Base to Adv. Port H (mm)	標準鞍座直徑 Standard Saddle Dia. J (mm)	鞍座凸出高度 Saddle Protr. from Plgr. K (mm)	柱塞空深度 Depth of Plunger Hole L (mm)	重量 (kg)	型號 Model Number	* 可選配傾斜式鞍座 * Optional Tilt Saddle 鞍座直徑 Saddle Dia. J1 (mm)	鞍座高度 Saddle Height K1 (mm)	鞍座型號 Saddle Model Number
162	212	130	99.0	70.0	52	50	1	19	17	CLSG-502	50	24	CATG-50
212	312	130	99.0	70.0	52	50	1	19	20	CLSG-504	50	24	CATG-50
262	412	130	99.0	70.0	52	50	1	19	23	CLSG-506	50	24	CATG-50
312	512	130	99.0	70.0	52	50	1	19	27	CLSG-508	50	24	CATG-50
362	612	130	99.0	70.0	52	50	1	19	31	CLSG-5010	50	24	CATG-50
412	712	130	99.0	70.0	52	50	1	19	34	CLSG-5012	50	24	CATG-50
182	232	165	130.0	95.0	54	75	1	19	19	CLSG-1002	73	29	CATG-100
232	332	165	130.0	95.0	54	75	1	19	29	CLSG-1004	73	29	CATG-100
282	432	165	130.0	95.0	54	75	1	19	40	CLSG-1006	73	29	CATG-100
332	532	165	130.0	95.0	54	75	1	19	50	CLSG-1008	73	29	CATG-100
382	632	165	130.0	95.0	54	75	1	19	61	CLSG-10010	73	29	CATG-100
432	732	165	130.0	95.0	54	75	1	19	71	CLSG-10012	73	29	CATG-100
196	246	205	159.0	114.0	61	94	1	19	39	CLSG-1502	91	31	CATG-150
246	346	205	159.0	114.0	61	94	1	19	52	CLSG-1504	91	31	CATG-150
296	446	205	159.0	114.0	61	94	1	19	65	CLSG-1506	91	31	CATG-150
346	546	205	159.0	114.0	61	94	1	19	78	CLSG-1508	91	31	CATG-150
396	646	205	159.0	114.0	61	94	1	19	92	CLSG-15010	91	31	CATG-150
446	746	205	159.0	114.0	61	94	1	19	105	CLSG-15012	91	31	CATG-150
216	266	235	184.0	133.0	67	113	1	24	55	CLSG-2002	118	35	CATG-200
316	466	235	184.0	133.0	67	113	1	24	91	CLSG-2006	118	35	CATG-200
466	766	235	184.0	133.0	67	113	1	24	146	CLSG-20012	118	35	CATG-200
235	285	275	216.0	165.0	73	145	1	24	102	CLSG-2502	144	46	CATG-250
335	485	275	216.0	165.0	73	145	1	24	136	CLSG-2506	144	46	CATG-250
485	785	275	216.0	165.0	73	145	1	24	207	CLSG-25012	144	46	CATG-250
312	362	310	241.0	197.0	101	177	1	19	184	CLSG-3002	160	62	CATG-300
412	562	310	241.0	197.0	101	177	1	19	232	CLSG-3006	160	62	CATG-300
562	862	310	241.0	197.0	101	177	1	19	303	CLSG-30012	160	62	CATG-300
375	425	350	267.0	216.0	114	196	3	27	270	CLSG-4002	193	51	CATG-400
475	625	350	267.0	216.0	114	196	3	27	330	CLSG-4006	193	51	CATG-400
625	925	350	267.0	216.0	114	196	3	27	421	CLSG-40012	193	51	CATG-400
419	469	400	305.0	248.0	114	228	3	27	401	CLSG-5002	228	63	CATG-500
519	669	400	305.0	248.0	114	228	3	27	480	CLSG-5006	228	63	CATG-500
669	969	400	305.0	248.0	114	228	3	27	599	CLSG-50012	228	63	CATG-500
429	479	430	330.0	267.0	114	247	3	27	474	CLSG-6002	241	76	CATG-600
529	679	430	330.0	267.0	114	247	3	27	565	CLSG-6006	241	76	CATG-600
679	979	430	330.0	267.0	114	247	3	27	701	CLSG-60012	241	76	CATG-600
474	524	505	387.0	317.0	149	297	3	27	741	CLSG-8002	287	75	CATG-800
574	724	505	387.0	317.0	149	297	3	27	880	CLSG-8006	287	75	CATG-800
724	1024	505	387.0	317.0	149	297	3	27	1058	CLSG-80012	287	75	CATG-800
564	614	560	432.0	343.0	174	323	3	27	1062	CLSG-10002	311	93	CATG-1000
664	814	560	432.0	343.0	174	323	3	27	1213	CLSG-10006	311	93	CATG-1000
814	1114	560	432.0	343.0	174	323	3	27	1439	CLSG-100012	311	93	CATG-1000

CLRG–系列，大噸位液壓油缸
CLRG-Series, High Tonnage Cylinders

雙作用大噸位液壓油缸
Double-Acting Power Lifters

承載能力: Capacity:	50-1000 ton
行程: Stroke:	50-300mm
最大工作壓力: Maximum Operating Pressure:	700 bar

- 雙作用，可推拉應用
- 上腔安全閥可防止意外超壓的危險
- 特殊承載設計，可承受油缸承載能力10%的側向載荷，而不受損壞
- 防塵圈減少污染，延長液壓油缸使用壽命
- 烤漆表面提供更强的抗腐蝕能力
- 所有型號都有標準的底部安裝孔

- Double-acting, for positive retraction
- Integral stop ring provides piston blow-out protection
- Safety valve in retract side of cylinder helps to prevent damage in case of accidental over-pressurization
- Plunger wiper reduces contamination, extending cylinder life
- Baked enamel finish and plated pistons provide

▼ CLRG系列油缸支撐頂升并固定這些甲板節段。

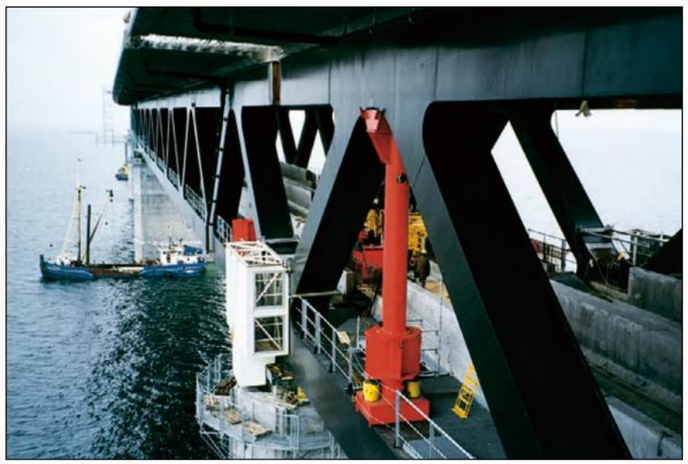

Replacing adjustment rolls under a fly-over with CLRG cylinders, for controlled lifting and lowering.

▼ 在立交橋中用CLRG油缸代替調節滚輪，提供受控的頂升與下降。

雙作用，大噸位液壓油缸
Double-Acting, High Tonnage Cylinders

▼快速選擇表
完整技術信息請參見下頁。
QUICK SELECTION CHART
For complete technical information see next page.

承載能力 Cylinder Capacity ton (kN)	行程 Stroke (mm)	型號 Model Number	有效面積 Cylinder Effective Area (cm^2) Push	有效面積 Pull	液壓油容量 Oil Capacity (cm^3) Push	液壓油容量 Pull	本體高度 Collapsed Height (mm)
50 (539)	50	CLRG-502	77.0	38.5	385	192	162
	100	CLRG-504	77.0	38.5	770	385	212
	150	CLRG-506	77.0	38.5	1155	577	262
	200	CLRG-508	77.0	38.5	1540	770	312
	250	CLRG-5010	77.0	38.5	1924	962	362
	300	CLRG-5012	77.0	38.5	2309	1155	412
100 (929)	50	CLRG-1002	132.7	61.9	664	309	179
	100	CLRG-1004	132.7	61.9	1327	619	229
	150	CLRG-1006	132.7	61.9	1991	928	279
	200	CLRG-1008	132.7	61.9	2655	1237	329
	250	CLRG-10010	132.7	61.9	3318	1546	379
	300	CLRG-10012	132.7	61.9	3982	1856	429
150 (1390)	50	CLRG-1502	198.6	96.5	993	482	196
	100	CLRG-1504	198.6	96.5	1986	965	246
	150	CLRG-1506	198.6	96.5	2978	1447	296
	200	CLRG-1508	198.6	96.5	3971	1930	346
	250	CLRG-15010	198.6	96.5	4964	2412	396
	300	CLRG-15012	198.6	96.5	5957	2895	446
200 (1861)	50	CLRG-2002	265.9	127.0	1330	635	212
	150	CLRG-2006	265.9	127.0	3989	1905	312
	300	CLRG-20012	265.9	127.0	7977	3809	462
250 (2565)	50	CLRG-2502	366.4	152.6	1832	763	235
	150	CLRG-2506	366.4	152.6	5497	2289	335
	300	CLRG-25012	366.4	152.6	10993	4578	485
300 (3193)	50	CLRG-3002	456.2	151.4	2281	757	322
	150	CLRG-3006	456.2	151.4	6843	2270	422
	300	CLRG-30012	456.2	151.4	13685	4541	572
400 (3919)	50	CLRG-4002	559.9	193.5	2800	967	374
	150	CLRG-4006	559.9	193.5	8399	2902	474
	300	CLRG-40012	559.9	193.5	16797	5804	624
500 (5114)	50	CLRG-5002	730.6	247.6	3653	1238	419
	150	CLRG-5006	730.6	247.6	10959	3713	519
	300	CLRG-50012	730.6	247.6	21918	7427	669
600 (5987)	50	CLRG-6002	855.3	295.4	4276	1477	429
	150	CLRG-6006	855.3	295.4	12829	4431	529
	300	CLRG-60012	855.3	295.4	25659	8862	679
800 (8234)	50	CLRG-8002	1176.3	387.0	5881	1935	484
	150	CLRG-8006	1176.3	387.0	17644	5806	584
	300	CLRG-80012	1176.3	387.0	35288	11611	734
1000 (10260)	50	CLRG-10002	1465.7	541.7	7329	2709	564
	150	CLRG-10006	1465.7	541.7	21986	8126	664
	300	CLRG-100012	1465.7	541.7	43972	16252	814

泵選擇
雙作用油缸必須由配有4通閥的泵驅動

Pump Selection
A double-acting cylinder must be powered by a pump with a 4-way valve.

鞍座
所有CLRG系列油缸都配有螺栓固定可拆卸鞍座，如需選擇傾斜式鞍座，請參見選擇表。

Saddles
All CLRG cylinders are equipped with bolt-on removable grooved saddles. For information on optional tilt saddles, see selection chart.

底部安裝孔尺寸 (mm)
Base Mounting Hole [1] Dimensions (mm)

型號 承載能力 Model / Capacity ton	螺栓分布圓 Bolt Circle U	螺紋大小 Thread Size V	最小螺紋深度 Min. Thread Depth Z
CLRG-50	65	2x M12	22
CLRG-100	95	2x M12	22
CLRG-150	130	2x M12	22
CLRG-200	165	3x M12	22
CLRG-250	190	3x M12	22
CLRG-300	180	3x M16	30
CLRG-400	205	3x M16	30
CLRG-500	250	3x M24	36
CLRG-600	275	3x M24	36
CLRG-800	330	3x M24	36
CLRG-1000	375	3x M24	36

CLRG–系列，大噸位液壓油缸
CLRG-Series, High Tonnage Cylinders

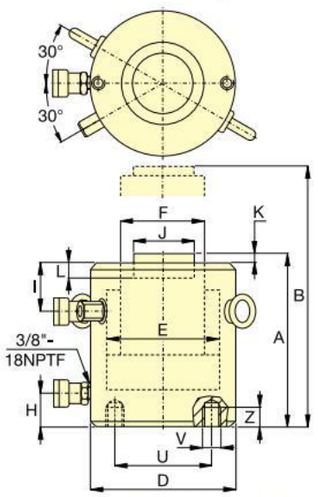

CLRG-502 - CLRG-15012

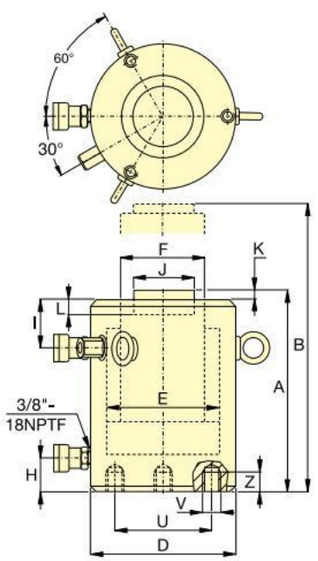

CLRG-2002 - CLRG-100012

完整信息见前页
For full features see previous page.

承载能力 Cylinder Capacity ton (kN)	行程 Stroke (mm)	型号 Model Number	油缸最大承载能力 Maximum Cylinder Capacity (kN) Push	Pull	油缸有效面积 Cylinder Effective Area (cm^2) Push	Pull	液压油容量 Oil Capacity (cm^3) Push	Pull
50	50	CLRG-502	539	269	77.0	38.5	385	192
	100	CLRG-504	539	269	77.0	38.5	770	385
	150	CLRG-506	539	269	77.0	38.5	1155	577
	200	CLRG-508	539	269	77.0	38.5	1540	770
	250	CLRG-5010	539	269	77.0	38.5	1924	962
	300	CLRG-5012	539	269	77.0	38.5	2309	1155
100	50	CLRG-1002	929	433	132.7	61.9	664	309
	100	CLRG-1004	929	433	132.7	61.9	1327	619
	150	CLRG-1006	929	433	132.7	61.9	1991	928
	200	CLRG-1008	929	433	132.7	61.9	2655	1237
	250	CLRG-10010	929	433	132.7	61.9	3318	1546
	300	CLRG-10012	929	433	132.7	61.9	3982	1856
150	50	CLRG-1502	1390	675	198.6	96.5	993	482
	100	CLRG-1504	1390	675	198.6	96.5	1986	965
	150	CLRG-1506	1390	675	198.6	96.5	2978	1447
	200	CLRG-1508	1390	675	198.6	96.5	3971	1930
	250	CLRG-15010	1390	675	198.6	96.5	4964	2412
	300	CLRG-15012	1390	675	198.6	96.5	5957	2895
200	50	CLRG-2002	1861	889	265.9	127.0	1330	635
	150	CLRG-2006	1861	889	265.9	127.0	3989	1905
	300	CLRG-20012	1861	889	265.9	127.0	7977	3809
250	50	CLRG-2502	2565	1068	366.4	152.6	1832	763
	150	CLRG-2506	2565	1068	366.4	152.6	5497	2289
	300	CLRG-25012	2565	1068	366.4	152.6	10993	4578
300	50	CLRG-3002	3193	1060	456.2	151.4	2281	757
	150	CLRG-3006	3193	1060	456.2	151.4	6843	2270
	300	CLRG-30012	3193	1060	456.2	151.4	13685	4541
400	50	CLRG-4002	3919	1354	559.9	193.5	2800	967
	150	CLRG-4006	3919	1354	559.9	193.5	8399	2902
	300	CLRG-40012	3919	1354	559.9	193.5	16797	5804
500	50	CLRG-5002	5114	1733	730.6	247.6	3653	1238
	150	CLRG-5006	5114	1733	730.6	247.6	10959	3713
	300	CLRG-50012	5114	1733	730.6	247.6	21918	7427
600	50	CLRG-6002	5987	2068	855.3	295.4	4276	1477
	150	CLRG-6006	5987	2068	855.3	295.4	12829	4431
	300	CLRG-60012	5987	2068	855.3	295.4	25659	8862
800	50	CLRG-8002	8234	2709	1176.3	387.0	5881	1935
	150	CLRG-8006	8234	2709	1176.3	387.0	17644	5806
	300	CLRG-80012	8234	2709	1176.3	387.0	35288	11611
1000	50	CLRG-10002	10260	3792	1465.7	541.7	7329	2709
	150	CLRG-10006	10260	3792	1465.7	541.7	21986	8126
	300	CLRG-100012	10260	3792	1465.7	541.7	43972	16252

雙作用，大噸位液壓油缸
Double-Acting, High Tonnage Cylinders

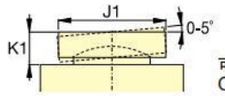

可选配倾斜式鞍座 *
Optional Tilt Saddle *

本体高度 Collaps. Height A (mm)	伸展高度 Extend. Height B (mm)	外径 Outside Dia. D (mm)	油缸内径 Cyl. Bore Dia. E (mm)	柱塞直径 Plunger Dia. F (mm)	进油口距底部高度 Base to Advance Port H (mm)	顶端到回油口距离 Top to Retract Port I (mm)	标准鞍座直径 Standard Saddle Dia. J (mm)	鞍座凸出高度 Saddle Protr. from Plgr. K (mm)	柱塞孔深度 Depth of Plunger Hole L (mm)	重量 (kg)	型号 Model Number	* 可选择倾斜式鞍座 Optional Tilt Saddle * 鞍座直径 Saddle Dia. J1 (mm)	鞍座高度 Saddle Height K1 (mm)	鞍座型号 Saddle Model Number
162	212	130	99	70	52	33	50	1	19	17	CLRG-502	50	24	CATG-50
212	312	130	99	70	52	33	50	1	19	20	CLRG-504	50	24	CATG-50
262	412	130	99	70	52	33	50	1	19	23	CLRG-506	50	24	CATG-50
312	512	130	99	70	52	33	50	1	19	27	CLRG-508	50	24	CATG-50
362	612	130	99	70	52	33	50	1	19	31	CLRG-5010	50	24	CATG-50
412	712	130	99	70	52	33	50	1	19	34	CLRG-5012	50	24	CATG-50
179	229	165	130	95	54	48	75	1	19	29	CLRG-1002	73	29	CATG-100
229	329	165	130	95	54	48	75	1	19	34	CLRG-1004	73	29	CATG-100
279	429	165	130	95	54	48	75	1	19	40	CLRG-1006	73	29	CATG-100
329	529	165	130	95	54	48	75	1	19	46	CLRG-1008	73	29	CATG-100
379	629	165	130	95	54	48	75	1	19	52	CLRG-10010	73	29	CATG-100
429	729	165	130	95	54	48	75	1	19	58	CLRG-10012	73	29	CATG-100
196	246	205	159	114	61	56	94	1	19	39	CLRG-1502	91	31	CATG-150
246	346	205	159	114	61	56	94	1	19	52	CLRG-1504	91	31	CATG-150
296	446	205	159	114	61	56	94	1	19	65	CLRG-1506	91	31	CATG-150
346	546	205	159	114	61	56	94	1	19	78	CLRG-1508	91	31	CATG-150
396	646	205	159	114	61	56	94	1	19	92	CLRG-15010	91	31	CATG-150
446	746	205	159	114	61	56	94	1	19	105	CLRG-15012	91	31	CATG-150
212	262	235	184	133	67	66	113	1	24	55	CLRG-2002	118	35	CATG-200
312	462	235	184	133	67	66	113	1	24	91	CLRG-2006	118	35	CATG-200
462	762	235	184	133	67	66	113	1	24	146	CLRG-20012	118	35	CATG-200
235	285	275	216	165	73	78	145	1	24	89	CLRG-2502	144	46	CATG-250
335	485	275	216	165	73	78	145	1	24	136	CLRG-2506	144	46	CATG-250
485	785	275	216	165	73	78	145	1	24	207	CLRG-25012	144	46	CATG-250
322	372	310	241	197	101	75	177	1	19	184	CLRG-3002	160	62	CATG-300
422	572	310	241	197	101	75	177	1	19	232	CLRG-3006	160	62	CATG-300
572	872	310	241	197	101	75	177	1	19	303	CLRG-30012	160	62	CATG-300
374	424	350	267	216	114	105	196	3	27	270	CLRG-4002	193	51	CATG-400
474	624	350	267	216	114	105	196	3	27	330	CLRG-4006	193	51	CATG-400
624	924	350	267	216	114	105	196	3	27	421	CLRG-40012	193	51	CATG-400
419	469	400	305	248	114	135	228	3	27	401	CLRG-5002	228	63	CATG-500
519	669	400	305	248	114	135	228	3	27	480	CLRG-5006	228	63	CATG-500
669	969	400	305	248	114	135	228	3	27	599	CLRG-50012	228	63	CATG-500
429	479	430	330	267	114	135	247	3	27	474	CLRG-6002	241	76	CATG-600
529	679	430	330	267	114	135	247	3	27	565	CLRG-6006	241	76	CATG-600
679	979	430	330	267	114	135	247	3	27	701	CLRG-60012	241	76	CATG-600
484	534	505	387	317	149	135	297	3	27	741	CLRG-8002	287	75	CATG-800
584	734	505	387	317	149	135	297	3	27	868	CLRG-8006	287	75	CATG-800
734	1034	505	387	317	149	135	297	3	27	1058	CLRG-80012	287	75	CATG-800
564	614	560	432	343	174	170	323	3	27	1062	CLRG-10002	311	93	CATG-1000
664	814	560	432	343	174	170	323	3	27	1213	CLRG-10006	311	93	CATG-1000
814	1114	560	432	343	174	170	323	3	27	1439	CLRG-100012	311	93	CATG-1000

RR–系列，雙作用液壓油缸
RR-Series, Double-Acting Cylinders

承載能力: Capacity:	10-520 ton
行程: Stroke:	57-1219 mm
最大工作壓力: Maximum Operating Pressure:	700 bar

- 外環螺紋、柱塞螺紋和底部安裝孔便于安裝（對大部分型號）
- 烤漆表面使耐腐蝕能力更强
- 可拆卸的鞍座，工作中可保護柱塞
- 内部安全閥防止意外過載
- 所有型號均含CR–400快速接頭
- 防塵圈减少污染，延長液壓油缸使用壽命

- Collar threads, plunger threads and base mounting holes for easy fixturing (on most models)
- Baked enamel finish for increased corrosion resistance
- Removable hardened saddles protect plunger during lifting and pressing
- Built-in safety valve prevents accidental over-pressurization
- CR-400 couplers included on all models
- Plunger wiper reduces contamination,extending cylinder life.

在一個特質的液壓壓床中，RR油缸提供動力和控制精度。
RR-cylinders provide power and precision in a special hydraulic press.

雙作用，液壓油缸
Double-Acting Cylinders

▾ 快速選擇表
請參看下面完整的技術信息表。

QUICK SELECTION CHART
For complete technical information see next page.

承載能力 Cylinder Capacity ton (kN)	行程 Stroke (mm)	型號 Model Number	液壓油缸有效面積 Cylinder Effective Area (cm²) 推 Push	拉 Pull	液壓油容量 Oil Capacity (cm³) 推 Push	拉 Pull	本體高度 Coll. Height (mm)
10 (101)	254	RR-1010	14.5	4.8	368	122	409
	305	RR-1012	14.5	4.8	442	147	457
30 (295)	209	RR-308	42.1	19.1	879	400	395
	368	RR-3014	42.1	19.1	1549	703	549
50 (498)	156	RR-506	71.2	21.5	1111	335	331
	334	RR-5013	71.2	21.5	2378	718	509
	511	RR-5020	71.2	21.5	3638	1099	733
75 (718)	156	RR-756	102.6	31.4	1601	490	347
	333	RR-7513	102.6	31.4	3417	1046	525
95 (933)	168	RR-1006	133.3	62.2	2238	1045	357
	333	RR-10013	133.3	62.2	4439	2071	524
	460	RR-10018	133.3	62.2	6132	2861	687
140 (1386)	57	RR-1502	198.1	95.4	1129	544	196
	156	RR-1506	198.1	95.4	3090	1488	385
	333	RR-15013	198.1	95.4	6597	3177	582
	815	RR-15032	198.1	95.4	16145	7775	1116
200 (1995)	152	RR-2006	285.0	145.3	4332	2209	430
	330	RR-20013	285.0	145.3	9405	4795	608
	457	RR-20018	285.0	145.3	13025	6640	765
	610	RR-20024	285.0	145.3	17385	8863	917
	914	RR-20036	285.0	145.3	26049	13280	1222
	1219	RR-20048	285.0	145.3	34741	17712	1527
325 (3201)	153	RR-3006	457.3	243.2	6997	3721	485
	305	RR-30012	457.3	243.2	13947	7418	638
	457	RR-30018	457.3	243.2	20889	11114	790
	609	RR-30024	457.3	243.2	27850	14811	943
	915	RR-30036	457.3	243.2	41843	22253	1247
	1219	RR-30048	457.3	243.2	55745	29646	1552
440 (4292)	152	RR-4006	613.1	328.1	9319	4987	538
	305	RR-40012	613.1	328.1	18700	10007	690
	457	RR-40018	613.1	328.1	28018	14995	843
	610	RR-40024	613.1	328.1	37400	20014	995
	914	RR-40036	613.1	328.1	56037	29988	1300
	1219	RR-40048	613.1	328.1	74737	39996	1605
520 (5108)	153	RR-5006	729.7	405.4	11164	6203	577
	305	RR-50012	729.7	405.4	22256	12365	730
	457	RR-50018	729.7	405.4	33347	18526	882
	609	RR-50024	729.7	405.4	44440	24689	1035
	915	RR-50036	729.7	405.4	66768	36973	1339
	1219	RR-50048	729.7	405.4	88951	49418	1644

鞍座
大于75噸的RR系列油缸配有柱塞安裝孔，以便安裝CAT系列傾斜式鞍座。
Saddles
All RAR-cylinders are equipped with bolt-on removable hardened steel saddles.
For Tilt Saddles see next page.

多用途
能在惡劣的環境下勝任工作，適合長周期的工業應用場合。
Saddles
All RAR-cylinders are equipped with bolt-on removable hardened steel saddles.
For Tilt Saddles see next page.

可選配的插入式鞍座
RR系列雙作用油缸可選配的插入式鞍座：
Optional Snap-in Saddles
Optional snap-in saddles for RR-Series double-acting cylinders:

鞍座類型 Saddle Type	油缸型號 Cylinder Model Number	鞍座型號 Saddle Model Number
扁平式 Flat	RR-1010, 1012	A-102F
傾斜式 Tilt	RR-1010, 1012	CAT-10
	RR-308, 3014	CAT-50
	RR-506, 5013 RR-5020, 756 RR-7513	CAT-100

標準鞍座:
Standard Saddles:

溝槽式 Grooved	RR-1010, 1012	A-102G
	RR-308, 3014	A-252G

RR–系列，雙作用液壓油缸
RR-Series, Double-Acting Cylinders

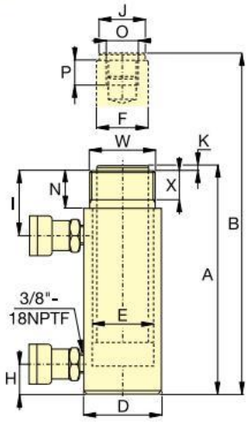

RR-1010 - RR-3014

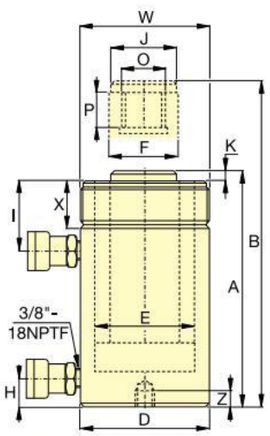

RR-506 - RR-50048

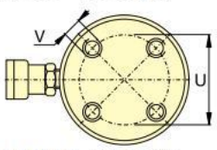

RR-1006 - RR-30048

没有安裝孔
No mounting holes on:
RR–506, 5013
RR–756, 7513
RR–1502, 15013

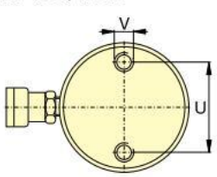

RR-4006 - RR-50048

◂ 完整特性參見前頁
For full features see previous page.

承載能力 Cylinder Capacity ton	行程 Stroke (mm)	型號 Model Number	最大承載能力 Max. Cylinder Capacity (kN) 推 Push	拉 Pull	有效面積 Cylinder Effective Area (cm^2) 推 Push	拉 Pull	液壓油容量 Oil Capacity (cm^3) 推 Push	拉 Pull	本體高度 Coll. Height A (mm)	伸展高度 Ext. Height B (mm)	外徑 Outside Dia. D (mm)
10	254	RR-1010 *	101	33	14.5	4.8	368	122	409	663	73
	305	RR-1012 *	101	33	14.5	4.8	442	147	457	762	73
30	209	RR-308 *	295	53	42.1	19.1	879	400	395	604	101
	368	RR-3014 *	295	53	42.1	19.1	1549	703	549	917	101
50	156	RR-506	498	103	71.2	21.5	1111	335	331	487	127
	334	RR-5013	498	103	71.2	21.5	2378	718	509	843	127
	511	RR-5020	498	103	71.2	21.5	3638	1099	733	1244	127
75	156	RR-756	718	156	102.6	31.4	1601	490	347	503	146
	333	RR-7513	718	156	102.6	31.4	3417	1046	525	858	146
95	168	RR-1006	933	435	133.3	62.2	2238	1045	357	525	177
	333	RR-10013	933	435	133.3	62.2	4439	2071	524	857	177
	460	RR-10018	933	435	133.3	62.2	6132	2861	687	1147	177
140	57	RR-1502	1386	668	198.1	95.4	1129	544	196	253	203
	156	RR-1506	1386	668	198.1	95.4	3090	1488	385	541	203
	333	RR-15013	1386	668	198.1	95.4	6597	3177	582	915	203
	815	RR-15032	1386	668	198.1	95.4	16145	7775	1116	1931	203
200	152	RR-2006	1995	1017	285.0	145.3	4332	2209	430	582	247
	330	RR-20013	1995	1017	285.0	145.3	9405	4795	608	938	247
	457	RR-20018	1995	1017	285.0	145.3	13025	6640	765	1222	247
	610	RR-20024	1995	1017	285.0	145.3	17385	8863	917	1527	247
	914	RR-20036	1995	1017	285.0	145.3	26049	13280	1222	2136	247
		RR-20048	1995	1017	285.0	145.3	34741	17712	1527	2746	247
325	153	RR-3006	3201	1703	457.3	243.2	6997	3721	485	638	311
	305	RR-30012	3201	1703	457.3	243.2	13947	7418	638	943	311
	457	RR-30018	3201	1703	457.3	243.2	20889	11114	790	1247	311
	609	RR-30024	3201	1703	457.3	243.2	27850	14811	943	1552	311
	915	RR-30036	3201	1703	457.3	243.2	41843	22253	1247	2162	311
	1219	RR-30048	3201	1703	457.3	243.2	55745	29646	1552	2771	311
440	152	RR-4006	4292	2297	613.1	328.1	9319	4987	538	690	358
	305	RR-40012	4292	2297	613.1	328.1	18700	10007	690	995	358
	457	RR-40018	4292	2297	613.1	328.1	28018	14995	843	1300	358
	610	RR-40024	4292	2297	613.1	328.1	37400	20014	995	1605	358
	914	RR-40036	4292	2297	613.1	328.1	56037	29988	1300	2214	358
	1219	RR-40048	4292	2297	613.1	328.1	74737	39996	1605	2824	358
520	153	RR-5006	5108	2838	729.7	405.4	11164	6203	577	730	397
	305	RR-50012	5108	2838	729.7	405.4	22256	12365	730	1035	397
	457	RR-50018	5108	2838	729.7	405.4	33347	18526	882	1339	397
	609	RR-50024	5108	2838	729.7	405.4	44440	24689	1035	1644	397
	915	RR-50036	5108	2838	729.7	405.4	66768	36973	1339	2254	397
	1219	RR-50048	5108	2838	729.7	405.4	88951	49418	1644	2863	397

* RR–1010和RR–1012:N=32mm　　RR–308和RR–3014:N=55mm

雙作用，液壓油缸
Double-Acting Cylinders

某些RR–系列的油缸回程承載能力可能比理論值小，這是由安全閥壓力設定減小造成。
安全閥壓力設置：

RR–308/3014:	275 bar
RR–506/5013/5020:	480 bar
RR–756/7513:	495 bar

油缸內徑 Cyl. Bore Dia. E (mm)	柱塞直徑 Plgr. Dia. F (mm)	進油口距底部高度 Base to Adv. Port H (mm)	頂端到回油口距離 Top to Ret. Port I (mm)	案組哦直徑 Saddle Dia. J (mm)	鞍座凸出高度 Saddle Protr. fr. Plgr. K (mm)	柱塞內螺紋 Plunger Internal Thread O	柱塞螺紋長度 Plunger Thread Length P (mm)	底部安裝孔尺寸 Base Mounting Holes 螺栓分布圓直徑 Bolt C. Dia. U (mm)	螺紋 Thread V	螺紋深度 Thd. Depth Z (mm)	外環螺紋 Collar Thread W	外環螺紋長度 Collar Thread Length X (mm)	重量 (kg)	型号 Model Number
42.9	34.9	36	57	35	6	1"- 8	25	–	–	–	2¼"- 14	26	12	RR-1010*
42.9	34.9	36	57	35	6	1"- 8	25	–	–	–	2¼"- 14	26	14	RR-1012*
73.2	54.1	39	81	50	10	1½"- 16	25	–	–	–	3 5/16"- 12	49	18	RR-308*
73.2	54.1	39	81	50	10	1½"- 16	25	–	–	–	3 5/16"- 12	49	29	RR-3014*
95.2	79.5	28	76	71	2	1"- 12	25	–	–	–	5"- 12	44	30	RR-506
95.2	79.5	28	76	71	2	1"- 12	25	–	–	–	5"- 12	44	52	RR-5013
95.2	79.5	57	76	71	2	1"- 12	25	76	½"- 13	25	5"- 12	44	68	RR-5020
114.3	95.2	30	76	71	6	1"- 12	38	–	–	–	5¾"- 12	38	41	RR-756
114.3	95.2	30	81	71	6	1"- 12	38	–	–	–	5¾"- 12	38	68	RR-7513
130.3	95.2	38	71	76	3	1¾"- 12	35	139	¾"- 10	25	6 7/8"- 12	50	61	RR-1006
130.3	95.2	38	71	76	3	1¾"- 12	35	139	¾"- 10	25	6 7/8"- 12	50	93	RR-10013
130.3	95.2	41	92	76	3	1¾"- 12	35	139	¾"- 10	25	6 7/8"- 12	50	117	RR-10018
158.8	114.3	22	66	95	19	–	–	–	–	–	–	–	49	RR-1502
158.8	114.3	49	84	114	19	3 3/8"- 16	35	158	¾"- 16	28	8"- 12	55	93	RR-1506
158.8	114.3	49	84	114	19	3 3/8"- 16	35	158	¾"- 16	28	8"- 12	55	124	RR-15013
158.8	114.3	76	88	114	19	3 3/8"- 16	35	–	–	–	8"- 12	55	238	RR-15032
190.5	133.4	57	96	133	22	–	–	127	1"- 8	25	–	–	147	RR-2006
190.5	133.4	57	96	133	22	2½"- 12	63	127	1"- 8	25	9¾"- 12	54	199	RR-20013
190.5	133.4	85	101	133	22	2½"- 12	63	127	1"- 8	25	9¾"- 12	54	204	RR-20018
190.5	133.4	85	101	133	22	2½"- 12	63	127	1"- 8	25	9¾"- 12	54	279	RR-20024
190.5	133.4	85	101	133	22	2½"- 12	63	127	1"- 8	25	9¾"- 12	54	383	RR-20036
190.5	133.4	85	101	133	22	2½"- 12	63	127	1"- 8	25	9¾"- 12	54	483	RR-20048
241.3	165.1	88	114	165	28	2½"- 12	82	158	1¼"- 7	44	12¼"- 12	58	200	RR-3006
241.3	165.1	88	114	165	28	2½"- 12	82	158	1¼"- 7	44	12¼"- 12	58	312	RR-30012
241.3	165.1	88	114	165	28	2½"- 12	82	158	1¼"- 7	44	12¼"- 12	58	385	RR-30018
241.3	165.1	88	114	165	28	2½"- 12	82	158	1¼"- 7	44	12¼"- 12	58	469	RR-30024
241.3	165.1	88	114	165	28	2½"- 12	82	158	1¼"- 7	44	12¼"- 12	58	628	RR-30036
241.3	165.1	88	114	165	28	2½"- 12	82	158	1¼"- 7	44	12¼"- 12	58	780	RR-30048
279.4	190.5	108	133	190	28	3"- 12	95	203	1½"- 6	50	14 1/8"- 8	65	303	RR-4006
279.4	190.5	108	133	190	28	3"- 12	95	203	1½"- 6	50	14 1/8"- 8	65	399	RR-40012
279.4	190.5	108	133	190	28	3"- 12	95	203	1½"- 6	50	14 1/8"- 8	65	453	RR-40018
279.4	190.5	108	133	190	28	3"- 12	95	203	1½"- 6	50	14 1/8"- 8	65	597	RR-40024
279.4	190.5	108	133	190	28	3"- 12	95	203	1½"- 6	50	14 1/8"- 8	65	792	RR-40036
279.4	190.5	108	133	190	28	3"- 12	95	203	1½"- 6	50	14 1/8"- 8	65	980	RR-40048
304.8	203.2	120	152	203	28	3¼"- 12	108	203	1¾"- 5	57	15 5/8"- 8	79	432	RR-5006
304.8	203.2	120	152	203	28	3¼"- 12	108	203	1¾"- 5	57	15 5/8"- 8	79	589	RR-50012
304.8	203.2	120	152	203	28	3¼"- 12	108	203	1¾"- 5	57	15 5/8"- 8	79	680	RR-50018
304.8	203.2	120	152	203	28	3¼"- 12	108	203	1¾"- 5	57	15 5/8"- 8	79	816	RR-50024
304.8	203.2	120	152	203	28	3¼"- 12	108	203	1¾"- 5	57	15 5/8"- 8	79	1002	RR-50036
304.8	203.2	120	152	203	28	3¼"- 12	108	203	1¾"- 5	57	15 5/8"- 8	79	1224	RR-50048

RRH–系列，中空柱塞液壓油缸
RRH-Series, Hollow Plunger Cylinders

承載能力: Capacity:	30-145 ton
行程: Stroke:	38-258 mm
中心孔直徑: Center Hole Diameter:	33.3-79.2 mm
最大工作壓力: Maximum Operating Pressure:	700 bar

- 溢流閥在過載時保護油缸免受損壞
- 烤漆表面提高抗腐蝕能力
- 外環螺紋更易安裝（除RRH-1001和RRH-1508）
- 雙作用可快速回程
- 鍍鎳表面，浮動中心管延長產品壽命
- 空心柱塞允許推力與拉力應用
- 所有型號帶CR–400快速接頭與防塵帽
- 防塵圈減少污染，延長液壓缸壽命

- Relief valves prevent damage in case of over-pressurisation
- Baked enamel finish for increased corrosion resistance
- Collar threads enable easy fixturing(except RRH-1001 and RRH-1508)
- Double-acting version for fast retraction
- Nickel-plated, floating center tube increases product life
- Hollow plunger allows for both pull and push forces
- CR-400 coupler and dust cap included on all models
- Plunger wiper reduces contamination,extending cylinder life.

▾ 雙作用中空柱塞油缸在橋梁建設中應用。
Double-acting hollow plunger cylinders are applied for bridge launching systems.

承載能力 Cylinder ton	行程 Stroke (mm)	型號 Model Number	油缸最大承載能力 Max. Cylinder Capacity (kN) 進程 Advance	回程 Retract	油缸有效面積 Cylinder Effective Area (cm^2) 進程 Advance	回程 Retract	液壓油容量 Oil Capacity (cm^3) 進程 Advance	回程 Retract
30	178	RRH-307	326	213	46.6	30.4	829	541
	258	RRH-3010	326	213	46.6	30.4	1202	784
60	89	RRH-603	576	380	82.3	54.2	733	482
	166	RRH-606	576	380	82.3	54.2	1366	900
	257	RRH-6010	576	380	82.3	54.2	2115	1393
95	38	RRH-1001	931	612	133.0	87.4	505	333
	76	RRH-1003	931	612	133.0	87.4	1011	666
	153	RRH-1006	931	612	133.0	87.4	2035	1337
	257	RRH-10010	931	612	133.0	87.4	3420	2246
145	203	RRH-1508	1429	718	204.1	102.6	4144	2083

雙作用，中空柱塞液壓油缸
Double-Acting, Hollow Plunger Cylinders

可選配的熱處理鞍座
Optional Heat Treated Hollow Saddles

鞍座類型 Saddle Type	油缸型號 Cylinder Model Number	鞍座型號 Saddle Model Nr.	鞍座尺寸 (mm) Saddle Dimensions A	B	C
中空螺紋鞍座	RRH-307, 3010	HP-3015	63	1¼"- 7	9
	RRH-603, 606, 6010	HP-5016	91	1⅝"- 5½	12
	RRH-1001, 1003, RRH-1006, 10010	HP-10016	126	2½"- 8	13

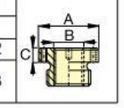

RRH–型號油缸標準件配有光滑中空鞍座。
Smooth hollow saddles are standard on all RRH-models.

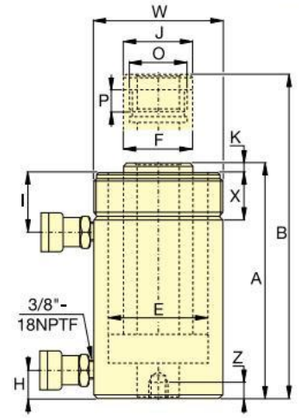

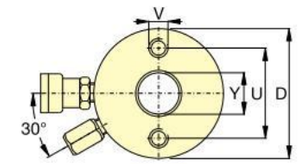

泵選擇
雙作用油缸必須由配有4通閥的泵驅動。
Pump Selection
A double-acting cylinder must be powered by a pump with a 4-way valve.

鞍座
所有RRH系列油缸配有平滑鞍座，可選螺紋鞍座及所有尺寸信息。
Saddles
All RRH-Series cylinders are equipped with smooth saddles. See table at next page for optional threaded saddles and all dimensional information.

Base Mounting Hole Dimensions(mm)
底部安裝孔尺寸 (mm)

型號 Model Number	螺栓分布圓 Bolt Circle U	螺紋 Thread V	螺紋深度 Thread Depth Z
RRH-307	92.2	⅜" - 16	15.7
RRH-3010	92.2	⅜" - 16	15.7
RRH-603	130.0	½" - 13	14.0
RRH-606	130.0	½" - 13	14.0
RRH-6010	130.0	½" - 13	14.0
RRH-1001	177.8	⅝" - 11	19.0
RRH-1003	177.8	⅝" - 11	19.0
RRH-1006	177.8	⅝" - 11	19.0
RRH-10010	177.8	⅝" - 11	19.0
RRH-1508	–	–	–

本體長度 Coll. Height A (mm)	伸展長度 Ext. Height B (mm)	外徑 Out. Dia. D (mm)	油缸內徑 Cyl. Bore Dia. E (mm)	柱塞直徑 Plgr. Dia. F (mm)	進油口距底部高度 Cyl. Base to Adv. Port H (mm)	頂端到回油口距離 Cyl. Top to Return Port I (mm)	鞍座直徑 Saddle Dia. J (mm)	鞍座凸出高度 Saddle Protr. fr. Plgr. K (mm)	螺紋 Thread O	柱塞螺紋長度 Plunger Thread Length P (mm)	外環螺紋 Collar Thread W	外環螺紋長度 Collar Thread Length X (mm)	中心孔直徑 Center Hole Dia. Y (mm)	重量 (kg)	型號 Model Number
330	508	114	88.9	63.5	25	60	63	9	1 13/16" -16	22	4½"-12	42	33.3	21	RRH-307
431	689	114	88.9	63.5	25	60	63	9	1 13/16"-16	22	4½"-12	42	33.3	27	RRH-3010
247	336	159	123.9	91.9	31	66	91	12	2¾"-16	19	6¼"-12	48	53.8	28	RRH-603
323	489	159	123.9	91.9	31	66	91	12	2¾"-16	19	6¼"-12	48	53.8	35	RRH-606
438	695	159	123.9	91.9	31	66	91	12	2¾"-16	19	6¼"-12	48	53.8	45	RRH-6010
165	203	212	165.1	127.0	38	44	126	12	4"-16	25	–	–	79.2	33	RRH-1001
254	330	212	165.1	127.0	38	85	126	12	4"-16	25	8⅜"-12	60	79.2	61	RRH-1003
342	495	212	165.1	127.0	38	85	126	12	4"-16	25	8⅜"-12	60	79.2	79	RRH-1006
460	717	212	165.1	127.0	38	85	126	12	4"-16	25	8⅜"-12	60	79.2	106	RRH-10010
349	552	247	190.5	152.4	38	60	127	4	4¼"-12	25	–	–	79.2	111	RRH-1508

BRC/BRP–系列，拉式液壓油缸
BRC, BRP-Series, Pull Cylinders

承載能力: Capacity:	2.5-50 ton
行程: Stroke:	127-155 mm
最大工作壓力: Maximum Operating Pressure:	700 bar

- 高强度合金鋼結構
- 柱塞限位結構，防止活塞杆過度伸出
- 鍍鉻柱塞使壽命更長
- 烤漆表面使耐腐蝕能力更强
- 所有型號均包含CR–400快速接頭與防塵帽
- 防塵圈減少污染，延長液壓缸使用壽命
- 單作用，彈簧回縮

- High strength alloy steel construction
- Plunger blow-out protection to prevent rod over-extension
- Hard chrome-plated plunger for long life
- Replaceable links on BRP-models
- Baked enamel finish for increased corrosion resistance
- CR-400 coupler and dust cap included on all models
- Plunger wiper reduces contamination,extending cylinder life
- Single-acting, spring return.

Ship building,welding and U-WELL pull cylinders go hand in hand.
優偉拉式液壓油缸與造船、焊接工作緊密相連。 ▼

TO lifta load bearing mast into place,BRP-series cylinders were used to tension the supporting cables.
提升一個承載桅纜杆到位，使用BRP–系列拉式油缸張緊支撐纜繩。 ◀

單作用，拉式液壓油缸
Single-Acting,Pull Cylinders

BRC油缸安裝尺寸(mm)
BRC Cylinder Mounting Dimensions (mm)

型號 Model Number	底部安裝孔 Base Mounting Hole V	外環螺紋 Collar Thread W	外環螺紋長度 Collar Thd. Lgth. X	安裝螺紋長度 Mtg. Thd. Lgth. Z
BRC-25	¾"-14 NPT	1½"- 16 UN	24	17
BRC-46	1¼"-11½ NPT	2¼"- 14 UN	26	24
BRC-106	M30 x 2	M85 x 2	25	24

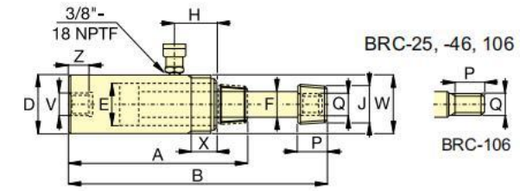

承載能力 Cylinder Capacity ton (kN)	行程 Stroke (mm)	型號 Model Number	有效面積 Cyl. Effect. Area (cm²)	液壓油容量 Oil Cap. (cm³)	本體長度 Coll. Height A (mm)	伸展長度 Ext. Height B (mm)	外徑 Outs. Dia. D (mm)	油缸內徑 Cyl. Bore Dia. E (mm)	柱塞直徑 Plgr. Dia. F (mm)	油缸頂到進油口距離 Top to Inlet Port H (mm)	鞍座直徑 Saddle Diameter J (NPT)	柱塞螺紋長度 Plgr. Thd. Lgth. P (mm)	柱塞外螺紋 Plunger Outside Thread Q	重量 (kg)
2.5 (24)	127	BRC-25	3.5	45	264	391	48	28.4	19.0	45	¾"-14	28	11/16"-24	1.8
5 (51)	140	BRC-46	7.3	101	301	441	57	42.9	30.2	42	1¼"-11½	32	1 3/16"-16	4.5
10 (105)	151	BRC-106	15.0	228	289	440	85	54.1	31.8	39	–	25	M30x2	9.5

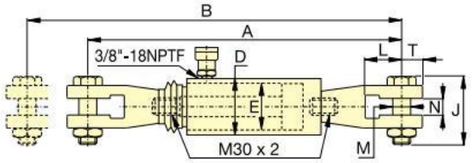

BRP-106C

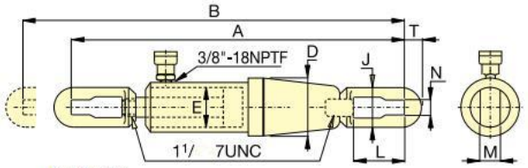

BRP-306

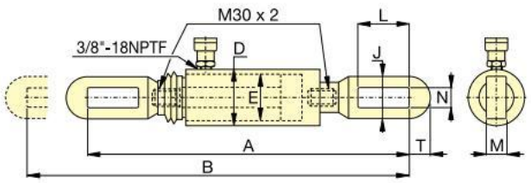

BRP-106L

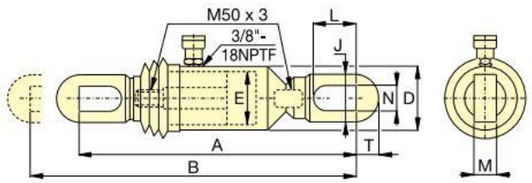

BRP-606

承載能力 Cylinder Capacity ton (kN)	行程 Stroke (mm)	型號 Model Number	有效面積 Cyl. Effect. Area (cm²)	液壓油容量 Oil Cap. (cm³)	本體長度 Coll. Height A (mm)	伸展長度 Ext. Height B (mm)	外徑 Outside Dia. D (mm)	油缸內徑 Cyl. Bore Dia. E (mm)	連接高度 Link Height J (mm)	連接開口 Link Open-ing L (mm)	連接厚度 Link Thick-ness M (mm)	連接寬度 Link Width N (mm)	連接端吊耳厚度 Slot to Link End T (mm)	重量 (kg)
10 (105)	151	BRP-106C*	15.0	227	587	738	85	54.1	119	62	30	35	32	15.9
	151	BRP-106L*	15.0	227	541	692	85	54.1	67	115	22	30	32	13.2
30 (326)	155	BRP-306*	46.6	722	1085	1240	136	88.9	114	145	35	39	50	48.1
50 (505)	152	BRP-606*	72.1	1096	719	871	140	110.0	130	149	39	50	70	53.5

*可成套供應，見前頁，BRP–106C、BRP–106L和BRP–606備有橡膠套以保護活塞杆。
* Available as set, see note on previous page. NOTE: BRP-106C, BRP-106L and BRP-606 are fitted with rubber bellows for rod protection.

RSM–系列，薄型液壓油缸
RSM-Series, Low Height Cylinders

承載能力: Capacity:	5-150 ton
行程: Stroke:	6-62mm
最大工作壓力: Maximum Operating Pressure:	700 bar

▼ 衹需極小空間RSM系列油缸可頂升一個大型建築。
Only a couple of centimeters will do for an RSM-cylinder to lift a large construction

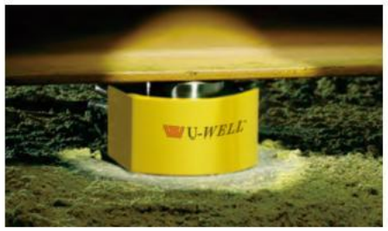

- 緊湊扁平設計用于其它液壓缸不適用的場合
- RSM–750/–1000/–1500配有手柄便于搬運
- 安裝孔使固定方便
- 烤漆表面增强耐腐蝕能力
- 所有型號均包含CR–400快速接頭與防塵帽，除
- RSM–50配有AR–400快速接頭
- 高質量銅柱塞表面鍍硬鉻處理
- 溝槽柱塞端面無需鞍座
- 單作用，彈簧回縮

- Compact, flat design for use where most other cylinders will not fit
- Single-acting, spring return
- RSM-750, 1000 and 1500 have handles for easy carrying
- Mounting holes permit easy fixturing
- Baked enamel finish for increased corrosion resistance
- Hard chrome plated high quality steel plungers
- Grooved plunger ends require no saddle.

承載能力 Cyl. Capa-city ton (kN)	行程 Stroke (mm)	型號 Model Number	有效面積 Cyl. Effect. Area (cm^2)	液壓油容量 Oil Cap. (cm^3)
5 (45)	6	RSM-50[1)]	6.5	4
10 (101)	12	RSM-100	14.5	18
20 (201)	11	RSM-200	28.7	32
30 (295)	13	RSM-300	42.1	55
45 (435)	16	RSM-500	62.1	99
75 (718)	16	RSM-750	102.6	164
90 (887)	16	RSM-1000	126.7	203
150 (1386)	16	RSM-1500	198.1	317

單作用，薄型液壓油缸
Single-Acting, Low Height Cylinders

液壓油缸–泵套件爲方便您的訂購，所帶*號的液壓缸都可成套供應（包括液壓缸，壓力表，接頭，軟管和泵）。

Cylinder-Pump Sets All cylinders marked with an * are available as sets (cylinder, gauge, couplers, hose and pump) for your ordering convenience.

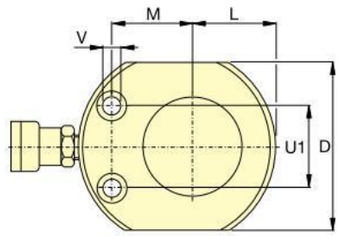

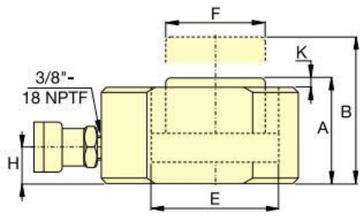

RSM–系列

RSM系列油缸安裝孔徑尺寸(mm) RSM Cylinder Mounting Hole Dimensions (mm)				
型號 Model Number	螺栓分布圓 Bolt Circle U1	孔徑 Hole Dia. V	沉孔直徑 Counter Bore Dia.	沉孔長度 Counter Bore Depth
RSM-50	28.5	5.5	9.1	4.3
RSM-100	36.6	7.1	10.7	7.9
RSM-200	49.3	10.0	15.1	9.9
RSM-300	52.3	10.0	15.9	11.2
RSM-500	66.5	11.0	19.0	12.7
RSM-750	76.2	13.5	20.6	14.2
RSM-1000	76.2	13.5	20.6	14.2
RSM-1500	117.3	13.5	20.6	14.2

本體高度 Collapsed Height A (mm)	伸展高度 Extended Height B (mm)	外徑 Outside Diameter D (mm)	油缸內徑 Cylinder Bore Dia. E (mm)	柱塞直徑 Plunger Dia. F (mm)	進油口距底部高度 Base to Advance Port H (mm)	鞍座凸出高度 Plunger Protrusion from Base K (mm)	柱塞到底板距離 Plunger to Base L (mm)	柱塞到安裝孔距離 Plunger to Mtg. Hole M (mm)	螺紋 Thread O (mm)	螺紋深度 Thread Depth P (mm)	螺栓分布圓 Bolt Circle U (mm)	重量 (kg)	型號 Model Number
32	38	58 x 41	28.7	25.4	16	1	20	22	–	–	–	1.0	RSM-50[1)]
42	54	82 x 55	42.9	38.1	19	1	27	34	–	–	–	1.4	RSM-100
51	62	101 x 76	60.5	50.8	19	1	39	39	–	–	–	3.1	RSM-200
58	71	117 x 95	73.2	63.4	19	2	47	44	–	–	–	4.5	RSM-300
66	82	140 x 114	88.9	69.8	19	2	57	53	–	–	–	6.8	RSM-500
79	95	165 x 139	114.3	82.6	19	2	69	66	–	–	–	11.3	RSM-750
85	101	178 x 153	127.0	92.2	19	2	76	74	–	–	–	14.5	RSM-1000
100	116	215 x 190	158.8	114.3	23	2	95	82	–	–	–	26.3	RSM-1500

RSMB–系列，薄型液壓油缸
RSMB-Series, Low Height Cylinders

承載能力: Capacity:	5-150 ton
行程: Stroke:	6-62mm
最大工作壓力: Maximum Operating Pressure:	700 bar

- 緊湊扁平設計用于其它液壓缸不適用的場合
- 安裝孔使固定方便
- 烤漆表面增强耐腐蝕能力
- 高質量鋼柱塞表面鍍硬鉻處理
- 溝槽柱塞端面無需鞍座
- 單作用，重力回縮

- Compact, flat design to use the place of most other cylinders will not fit
- Mounting holes permit easy fixturing
- Baked enamel finish for increased corrosion resistance
- Hard chrome plated high quality steel plungers
- Grooved plunger ends require no saddle.
- Single-acting, gravity retraction

- RSMB系列是近年設計開發的輕便多節型液壓千斤頂，非常適合窄小空間，同時又需要加長行程的地方作業。廣泛用于電力，通訊，機械，橋梁，鋼鐵等行業。
  RSMB Series It's designed recently to be multi-section hydraulic jack,which is very suitable for narrow space as well as the place needs longer trip.It is already applied to power,communication,machinery,bridges,steel industries,etc.

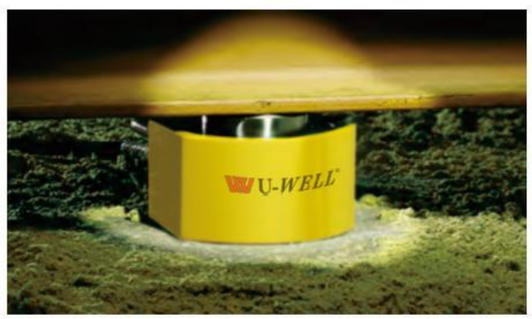

◀ 衹需極小空間RSMB系列油缸可頂升一個大型建築。
Only a couple of centimeters will do for an RSMB-cylinder to lift a large construction

單作用，薄型液壓油缸
Single-Acting, Low Height Cylinders

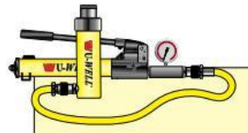

液壓油缸–泵套件爲方便您的訂購，所帶*號的液壓缸都可成套供應（包括液壓缸，壓力表，接頭，軟管和泵）。
Cylinder-Pump Sets All cylinders marked with an * are available as sets (cylinder, gauge, couplers, hose and pump) for your ordering convenience.

RSMB系列多節千斤頂適合在有限空間，在有效的本體高度內，增大了千斤頂的行程，從而使重物升得更高，使用更加方便。 產品廣泛用于石油、化工、電力、制藥、冶金、鋼鐵、車船、橋梁等行業的大中型機械設備的安裝和維修，是安裝、檢修工人理想的必備工具。

多節千斤頂除了具有標準千斤頂的品質特徵和頂升能力之外．還具有超長的行程。可以避免了頂升，墊高，再頂升這反復過程，從而節省了時間并提高工作效率。在大多數的應用中．使用者僅需一次放置多級千斤頂可完成頂升工作。

The RSMB series multi-section jacks are suitable for using in a limited space, in the effective body height, increase the stroke of the jack, so that the weight rises higher and the useage is more convenient. The products are widely used in the installation and maintenance of large and medium-sized machinery and equipment in petroleum, chemical, electric power, pharmaceutical, metallurgy, steel, automobile, ship and bridge industries. It is an ideal tool for installation and maintenance workers.

In addition to the quality characteristics and jacking ability of the standard jack, the multi-section jack also has an extra long journey. Can avoid the jacking up, padding. This process is repeated to save time and improve work efficiency. In most applications. The user only needs to place a multi-stage jack at a time to complete the jacking work.

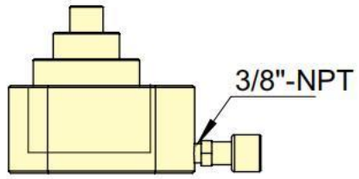

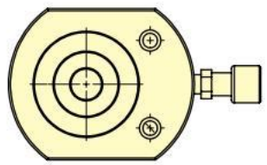

型號 Model Number	出力 Output (T)	行程 Stroke (mm)	本體高度 Collapsed Height (mm)	儲油量 Oil Cap. (cc)	伸長總高 Extended Height (mm)	外徑x扁方 Outside Diameter X Flat side (mm)	重量 (kg)
RSMB-100	10	25	42	22	67	∅82×55	1.5
RSMB-200	20	26	51	41	77	∅101×76	2.4
RSMB-300	30	53	58	58	111	∅117×95	4.5
RSMB-500	50	64	66	113	130	∅140×114	7.0

RCS–系列，薄型液壓油缸
RCS-Series, Low Height Cylinders

單作用，薄型液壓油缸
Single-Acting, Low Height Cylinders

承載能力: Capacity:	5-150 ton
行程: Stroke:	6-62mm
最大工作壓力: Maximum Operating Pressure:	700 bar

- 輕巧緊凑設計用于狹小工作空間
- 烤漆表面增强耐腐蝕能力
- 防塵圈减少污染，延長液壓缸使用壽命
- 溝槽柱塞頂部的螺紋孔可用于安裝傾斜式鞍座
- RCS–1002配有手柄便于携帶
- 鋼柱塞表面鍍硬鉻處理
- 單作用，彈簧回縮

- Lightweight, low profile design for use in confined spaces
- Single-acting, spring return
- Baked enamel finish for increased corrosion resistance
- Plunger wiper reduces contam ination,extending cylinder life
- Grooved plunger end with threaded holes for mounting tilt saddles
- Integral handle on RCS-1002 for easy carrying
- Steel plunger surface is chromium-plating

可選擇的螺栓安裝傾斜鞍座尺寸 (mm)
Optional Bolt On Tilt Saddle Dimensions (mm)

油缸種類: For Cylinder Model:	型號 Model Number	A	B	C*
RCS-101	CAT-11	35	11	21
RCS-201, -302, -502	CAT-51	50	15	29
RCS-1002	CAT-101	71	17	35

* "C" 的尺寸等于鞍座突出部分到柱塞的距離，安裝螺栓包括在内。
* 'C' dimension equals saddle protrusion from plunger. Mounting screws are included.

液壓油缸-泵套件爲方便您的訂購，所帶*號的液壓缸都可成套供應（包括液壓缸，壓力表，接頭，軟管和泵）。

Cylinder-Pump Sets All cylinders marked with an * are available as sets (cylinder, gauge, couplers, hose and pump) for your ordering convenience.

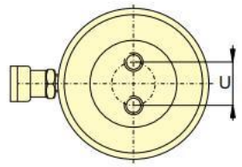

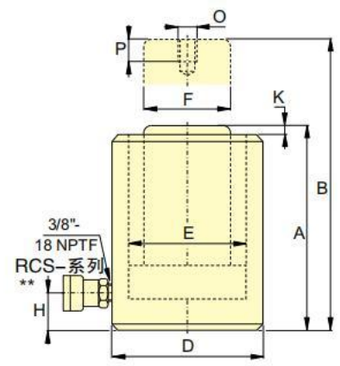

鞍座
所有RCS系列油缸有柱塞安裝孔用于安裝傾斜式鞍座，參見尺寸與選擇圖表。

Saddles
All RCS-Series cylinders have plunger mounting holes for installation of tilt saddles. See table for selection and dimensional information.

承載能力 Cyl. Capa-city ton (kN)	行程 Stroke (mm)	型號 Model Number	有效面積 Cyl. Effect. Area (cm^2)	液壓油容量 Oil Cap. (cm^3)
10 (101)	38	RCS-101*	14.5	55
20 (201)	45	RCS-201*	28.7	129
30 (295)	62	RCS-302*	42.1	261
45 (435)	60	RCS-502*	62.1	373
90 (887)	57	RCS-1002*	126.7	722

本體高度 Collapsed Height A (mm)	伸展高度 Extended Height B (mm)	外徑 Outside Diameter D (mm)	油缸內徑 Cylinder Bore Dia. E (mm)	柱塞直徑 Plunger Dia. F (mm)	進油口距底部高度 Base to Advance Port H (mm)	鞍座凸出高度 Plunger Protrusion from Base K (mm)	柱塞到底板距離 Plunger to Base L (mm)	柱塞到安裝孔距離 Plunger to Mtg. Hole M (mm)	螺紋 Thread O (mm)	螺紋深度 Thread Depth P (mm)	螺栓分布圓 Bolt Circle U (mm)	重量 (kg)	型號 Model Number
88	126	69	42.9	38.1	17	5	–	–	M4	8	26	4.1	RCS-101*
98	143	92	60.5	50.8	17	3	–	–	M5	8	40	5.0	RCS-201*
117	179	101	73.2	66.5	19	3	–	–	M5	8	40	6.8	RCS-302*
122	182	124	88.9	69.8	23	2	–	–	M5	8	40	10.9	RCS-502*
141	198	165	127.0	92.2	31	1	–	–	M8	10	55	22.7	RCS-1002*

** RCS–101, 201, 302的安裝接頭角度爲5°。
* 5° angle position of coupler on RCS-101, 201,302

RA 系列鋁制油缸
RA Series,Aluminium Cylinders

下圖所示從左到右：
From left to right: RAC, RACL, RACH, RAR

承載能力: Capacity:	20-150 ton
行 程: Stroke:	50-250 mm
最大工作壓力: Maximum Operating Pressure:	700 bar

- 輕質，易于搬運和定位，具有更高的工作能力和重量比
- 抗腐蝕性設計，鋁是一種在腐蝕性環境下使用的良好材料
- 復合支撑環，防止金屬與金屬間的接觸，降低偏載問題，延長油缸的使用壽命

- Lightweight, easy to carry and position to allow a higher cylinder capacity-to-weight-ratio
- Non-corrosive by design, aluminium has always been a good material for use in many caustic environments
- Composite Bearings on all moving surfaces guarantee no metal-to-metal contact, to resist side loads and increase cylinder life.

80%

考慮安全
制造商标明的负载和行程额定值是最大安全极限值。推荐只使用这些额定值的80%。

Think Safety
Manufacturer's rating of load and stroke are maximum safe limits.Good practice encourages using only 80% of these ratings.

鋁制油缸
Aluminium Cylinders

可拆卸的硬質鞍座，防止柱塞與粗糙表面接觸時的損壞。
Removable Hardened Saddle,protects plunger from being damaged by abrasive surface contact.

擋圈，在所有型號的油缸上擋圈用于吸收偏載，防止柱塞過度伸出。
Stop Ring on all models absorbs eccentric loading and prevents plunger over-extension.

復合支撑環，防止金屬與金屬間的接觸，降低偏載問題，延長油缸使用壽命。
Composite Bearing material to prevent metal to metal contact, reducing side-load issues and increasing life.

表面硬化的活塞杆和底座，防止損壞和擦傷。
Hard-coated Plunger and Base resist wear and prevent galling.

7075–T6鋁合金部件强度大，重量輕。
7075-T6 Aluminium Alloy Components for maximum strength and minimum weight.

活塞杆回程彈簧，在單作用油缸中用于油缸的回程。
Plunger Return Spring on all single-acting models for prompt cylinder return.

復合支撑環，防止金屬與金屬之間的接觸降低偏載問題，延長油缸使用壽命。
Composite Bearing material to prevent metal to metal contact, reducing side-load issues and increasing life.

鋼制底座，防止油缸與粗糙表面接觸和承載時的損壞。
Steel Base Plate protects cylinder base from abrasive surfaces and load-induced damage.

鋁制與鋼制的對比
鋁制油缸在提供最輕量級的解决方案的同時，由于材料特性也有一些獨特的局限性。它與鋼制油缸不同之處在于：它具有較低的有限疲勞壽命。鋁制油缸不得用在生產等高頻應用場合中。
優偉鋁制油缸系列設計使用壽命爲推薦壓力下5000個工作循環。不應超過此限制。在正常頂升及多數維護作業中，這理應滿足需求。

The contrast between aluminum and steel
Aluminum cylinder provides the lightest solution while at the same time due to the materialFeatures also have some unique limitations. It differs from a steel cylinderYu: it has a lower finite fatigue life. Aluminum cylinders shall not be used in productionProduction of high frequency applications.

U-WELL aluminum cylinder series design service life for the recommended pressure of 5000 workers As a cycle. This limit should not be exceeded. In normal jacking and most maintenance operations, which should satisfy demand.

鋼制底板
鋼制底板保護油缸不受損壞，不應拆下。這些鋁制油缸上的底孔被設計用于固定鋼制底板。它們將不承受油缸工作負載。請勿使用這些鋁制油缸上的底孔來將任何設備連接到油缸上。

Steel plate
The steel base plate protects the oil cylinder from damage and should not be removed.The bottom holes in these aluminum cylinders are designed to hold the steel in placeThe bottom plate. They will not bear the cylinder workload.Do not use these aluminum cylinders on the bottom hole to place anyThe device is connected to the cylinder.

RAC–系列，單作用鋁制油缸
RAC-Series,Aluminium Cylinders

圖從左到右
from left to right:

重量輕，搬運方便
Lightweight for Maximum Portability

承載能力: Capacity:	20-150 ton
行程: Stroke:	50-250 mm
最大工作壓力: Maximum Operating Pressure:	700 bar

- 復合支撐環能防止金屬間的接觸，延長油缸使用壽命，并能防止10%的側向載荷
- 表面經過完全硬化處理，防止損壞，延長油缸使用壽命
- 所有型號的油缸都配有把手
- 鋼制底座和鞍座能防止承載時引起的損壞
- 整體式擋圈防止柱塞過度伸長，并能承受油缸的最大頂升力
- 高强度回程彈簧使油缸能够快速回程
- 所有型號的油缸都配有CR–400快速接頭和防塵帽
- 所有型號的油缸都符合ASME B–30.1和ISO10100標準

- Composite bearings prevent metal-to-metal contact, increasing cylinder life and resistance to side-loads of up to 10%
- Hard-Coat finish on all surfaces resists damage and extends cylinder life
- Handles included on all models
- Steel base plate and saddle for protection against load-induced damage
- Integral stop ring prevents plunger over-travel and is capable of withstanding the full cylinder capacity
- High strength return spring for rapid cylinder retraction
- CR-400 coupler and dustcap included on all models
- All cylinders meet ASME B-30.1 and ISO 10100 standards.

鞍座
所有RAC系列油缸都配有采用螺栓固定、可拆卸的硬质鞍座。

Saddles
All RAC-cylinders are equipped with bolt-on removable hardened steel saddles. For Tilt Saddles see next page.

單作用，鋁制油缸
Single-Acting,Aluminium Cylinders

Steel Base Plate Mounting Holes
鋼底座安裝孔

油缸型號/承載能力 Cylinder Model / Capacity ton	螺栓分布圓直徑 Bolt Circle U (mm)	螺紋 Thread V (mm)	螺紋深度[1] Thread Depth [1] Z (mm)
RAC-20	70	M6	12
RAC-30	80	M6	12
RAC-50	110	M6	12
RAC-100	150	M10	12
RAC-150	200	M10	12

[1] Including Base Plate Height of 6 mm
[1] 包含6mm的底座高度。

Optional Bolt-on Tilt Saddle Dimensions (mm)
選配螺栓安裝的傾斜式鞍座尺寸 (mm)

油缸型號/承載能力 For Cylinder Model /Capacity ton	傾斜式鞍座型號 Tilt Saddle Model Number	傾斜式鞍座直徑 Tilt Saddle Diameter J1	鞍座突出柱塞高度 Saddle Protrusion from Plunger K1
RAC-50	CATG-50	50	24
RAC-100	CATG-150	91	31
RAC-150	CATG-200	118	35

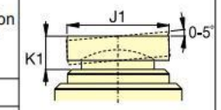

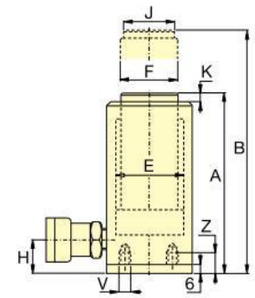

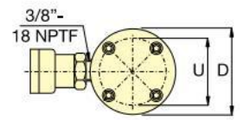

油缸承載能力 @ 700 bar Cylinder Capacity ton (kN)	行程 Stroke (mm)	型號 Model Number *	油缸有效面積 Cylinder Effective Area (cm²)	油量 Oil Capacity (cm³)	本體高度 Height A (mm)	伸展高度 Extended Height B (mm)	外徑 Outside Diameter D (mm)	油缸內徑 Cylinder Bore Diameter E (mm)	柱塞直徑 Plunger Diameter F (mm)	底部距進油口距離 Bottom to Advance Port H (mm)	鞍座直徑 Saddle Diameter J (mm)	鞍座距本體距離 Saddle Protrusion from Plunger K (mm)	重量 (kg)	型號 Model Number *
20 (218)	50	RAC-202	31.2	156	174	224	85	63	50	27	40	3	3.6	RAC-202
	100	RAC-204	31.2	312	224	324	85	63	50	27	40	3	4.1	RAC-204
	150	RAC-206	31.2	468	274	424	85	63	50	27	40	3	4.6	RAC-206
	200	RAC-208	31.2	624	324	524	85	63	50	27	40	3	5.1	RAC-208
	250	RAC-2010	31.2	780	374	624	85	63	50	27	40	3	5.6	RAC-2010
30 (309)	50	RAC-302	44.2	221	181	231	100	75	60	32	40	3	4.5	RAC-302
	100	RAC-304	44.2	442	231	331	100	75	60	32	40	3	5.2	RAC-304
	150	RAC-306	44.2	663	281	431	100	75	60	32	40	3	5.9	RAC-306
	200	RAC-308	44.2	884	331	531	100	75	60	32	40	3	6.6	RAC-308
	250	RAC-3010	44.2	1105	381	631	100	75	60	32	40	3	7.3	RAC-3010
50 (496)	50	RAC-502	70.9	354	186	236	130	95	80	30	50	3	8.5	RAC-502
	100	RAC-504	70.9	709	236	336	130	95	80	30	50	3	9.8	RAC-504
	150	RAC-506	70.9	1063	286	436	130	95	80	30	50	3	11.1	RAC-506
	200	RAC-508	70.9	1417	336	536	130	95	80	30	50	3	12.4	RAC-508
	250	RAC-5010	70.9	1771	386	636	130	95	80	30	50	3	13.7	RAC-5010
100 (1002)	50	RAC-1002	143.1	715	221	271	180	135	110	46	94	3	17.3	RAC-1002
	100	RAC-1004	143.1	1431	271	371	180	135	110	46	94	3	19.6	RAC-1004
	150	RAC-1006	143.1	2147	321	471	180	135	110	46	94	3	21.9	RAC-1006
	200	RAC-1008	143.1	2863	371	571	180	135	110	46	94	3	24.2	RAC-1008
	250	RAC-10010	143.1	3578	421	671	180	135	110	46	94	3	26.5	RAC-10010
150 (1589)	50	RAC-1502	227.0	1135	243	293	230	170	140	51	113	3	25.3	RAC-1502
	100	RAC-1504	227.0	2270	293	393	230	170	140	51	113	3	29.3	RAC-1504
	150	RAC-1506	227.0	3405	343	493	230	170	140	51	113	3	33.3	RAC-1506
	200	RAC-1508	227.0	4540	393	593	230	170	140	51	113	3	37.3	RAC-1508
	250	RAC-15010	227.0	5675	443	693	230	170	140	51	113	3	41.3	RAC-15010

RAR–系列，雙作用鋁制油缸
RAR-Series Double-Acting,Aluminium Cylinders

圖從左到右
from left to right:
RAR-5010, RAR-308, RAR-204

承載能力: Capacity:	20-150 ton
行程: Stroke:	50-250 mm
最大工作壓力: Maximum Operating Pressure:	700 bar

- 復合支撐環防止金屬間的相互接觸，增加油缸壽命，并能防止10%的偏載
- 表面經過完全硬化處理，避免損壞，延長油缸使用壽命
- 所有型號的油缸都配有把手
- 鋼底座和鞍座防止承載引起的損壞
- 整體式擋圈防止柱塞過度伸長，并能承受油缸的最大頂升力
- 內置安全閥防止意外的超壓
- 雙作用設計使油缸能快速回程，與油管長度和系統壓力損失無關

- Double-acting for rapid retraction, regardless of hose lengths or system losses
- Composite bearings increase cylinder life and sideload resistance
- Hard-Coat finish on all surfaces resists damage and extends cylinder life
- Handles included on all models
- Steel base plate and saddle for protection against load-induced damage
- Integral stop ring prevents plunger over-travel and is capable of withstanding the full cylinder capacity
- Built-in safety valve prevents accidental over-pressurization.

An RAR-506 was easy to position under a bulldozer for repair of frame member.

RAR–系列油缸在大型平臺頂升中應用

油缸工作承載能力 @ 700 bar Cylinder Capacity ton	行程 Stroke (mm)	型號 Model Number *	油缸最大工作能力 (kN) 推 Push	拉 Pull	油缸有效面積 Cylinder Effective Area (cm^2) 推 Push	拉 Pull	油量 Oil Capacity (cm^3) 推 Push	拉 Pull
20	50	RAR-202	218	130	31.2	18.6	156	93
	100	RAR-204	218	130	31.2	18.6	312	186
	150	RAR-206	218	130	31.2	18.6	468	279
	200	RAR-208	218	130	31.2	18.6	624	372
	250	RAR-2010	218	130	31.2	18.6	780	465
30	50	RAR-302	309	179	44.2	24.5	221	123
	100	RAR-304	309	179	44.2	24.5	442	245
	150	RAR-306	309	179	44.2	24.5	663	368
	200	RAR-308	309	179	44.2	24.5	884	490
	250	RAR-3010	309	179	44.2	24.5	1105	613
50	50	RAR-502	496	187	70.9	26.7	354	134
	100	RAR-504	496	187	70.9	26.7	709	267
	150	RAR-506	496	187	70.9	26.7	1063	401
	200	RAR-508	496	187	70.9	26.7	1417	534
	250	RAR-5010	496	187	70.9	26.7	1771	668
100	50	RAR-1002	1002	557	143.1	79.5	715	398
	100	RAR-1004	1002	557	143.1	79.5	1431	795
	150	RAR-1006	1002	557	143.1	79.5	2147	1193
	200	RAR-1008	1002	557	143.1	79.5	2863	1590
	250	RAR-10010	1002	557	143.1	79.5	3578	1988
150	50	RAR-1502	1589	924	227.0	132.0	1135	660
	100	RAR-1504	1589	924	227.0	132.0	2270	1320
	150	RAR-1506	1589	924	227.0	132.0	3405	1980
	200	RAR-1508	1589	924	227.0	132.0	4540	2640
	250	RAR-15010	1589	924	227.0	132.0	5675	3300

雙作用，鋁制油缸
Double-Acting,Aluminium Cylinders

Optional Bolt-on Tilt Saddle Dimensions (mm)
選配螺栓安裝的傾斜式鞍座尺寸 (mm)

油缸型號/承載能力 For Cylinder Model /Capacity ton	傾斜式鞍座型號 Tilt Saddle Model Number	傾斜式鞍座直徑 Tilt Saddle Diameter J1	鞍座突出柱塞高度 Saddle Protrusion from Plunger K1
RAR-50	CATG-50	50	24
RAR-100	CATG-150	73	29
RAR-150	CATG-200	91	31

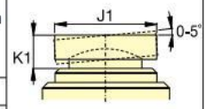

Steel Base Plate Mounting Holes
鋼底座安裝孔

油缸型號/承載能力 Cylinder Model / Capacity ton	螺栓分布圓直徑 Bolt Circle U (mm)	螺紋 Thread V (mm)	螺紋深度[1] Thread Depth [1] Z (mm)
RAR-20	93	M6	12
RAR-30	105	M6	12
RAR-50	110	M6	12
RAR-100	165	M6	12
RAR-150	200	M6	12

[1] Including Base Plate Height of 6 mm
[1] 包含6mm的底座高度。

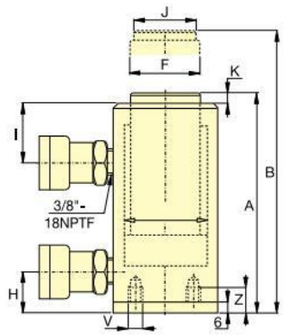

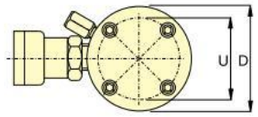

鞍座
所有RAR油缸都配有采用螺栓固定，可拆卸的硬質鞍座。
Saddles
All RAR-cylinders are equipped with bolt-on removable hardened steel saddles.
For Tilt Saddles see next page.

本體高度 Height A (mm)	伸展高度 Extended Height B (mm)	外徑 Outside Diameter D (mm)	油缸內徑 Cylinder Bore Diameter E (mm)	柱塞直徑 Plunger Diameter F (mm)	底部距進油口距離 Bottom to Advance Port H (mm)	頂部距進油口距離 Saddle Diameter I (mm)	鞍座直徑 Saddle Protrusion from Plunger J (mm)	鞍座距本體距離 K (mm)	重量 (kg)	型號 Model Number *
189	239	113	63	40	30	50	30	3	7.4	RAR-202
239	339	113	63	40	30	50	30	3	8.0	RAR-204
289	439	113	63	40	30	50	30	3	8.6	RAR-206
339	539	113	63	40	30	50	30	3	9.2	RAR-208
389	639	113	63	40	30	50	30	3	9.8	RAR-2010
201	251	125	75	50	30	55	40	3	8.6	RAR-302
251	351	125	75	50	30	55	40	3	9.5	RAR-304
301	451	125	75	50	30	55	40	3	10.4	RAR-306
351	551	125	75	50	30	55	40	3	11.3	RAR-308
401	651	125	75	50	30	55	40	3	12.2	RAR-3010
201	251	145	95	75	30	56	50	3	11.1	RAR-502
251	351	145	95	75	30	56	50	3	12.7	RAR-504
301	451	145	95	75	30	56	50	3	14.3	RAR-506
351	551	145	95	75	30	56	50	3	15.9	RAR-508
401	651	145	95	75	30	56	50	3	17.5	RAR-5010
251	301	185	135	90	43	80	75	3	16.4	RAR-1002
301	401	185	135	90	43	80	75	3	19.3	RAR-1004
351	501	185	135	90	43	80	75	3	22.2	RAR-1006
401	601	185	135	90	43	80	75	3	25.1	RAR-1008
451	701	185	135	90	43	80	75	3	28.0	RAR-10010
248	298	230	170	110	38	75	113	3	24.2	RAR-1502
298	398	230	170	110	38	75	113	3	28.9	RAR-1504
348	498	230	170	110	38	75	113	3	33.2	RAR-1506
398	598	230	170	110	38	75	113	3	37.9	RAR-1508
448	698	230	170	110	38	75	113	3	42.6	RAR-15010

RACH–系列，鋁制中空柱塞油缸
RACH, Aluminium Hollow Plunger Cylinders

圖從左到右
from left to right:
RACH-1504, RACH-15010, RACH-206, RACH-306

拉伸和測試的輕質解決方案
The Lightweight Solution for Tensioning and Testing

承載能力: Capacity:	20-150 ton
行程: Stroke:	50-250 mm
中心孔直徑 : Center Hole Diameter:	27-79 mm
最大工作壓力: Maximum Operating Pressure:	700 bar

- 中空柱塞設計允許推、拉應用
- 柱塞上的內螺紋用于安裝連接
- 復合支撑環防止金屬間的接觸，延長油缸的使用壽命，并能防止10%的側面載荷
- 表面經過完全硬化處理，防止損壞，延長油缸使用壽命
- 活動的中心管增加密封性和產品壽命
- 所有型號的油缸都配有把手
- 整體式擋圈防止柱塞過度伸長，并能承受油缸的最大頂升力
- 高强度回程彈簧使油缸能够快速回程

- Hollow plunger design allows for both pull and push forces
- Composite bearings increase cylinder life and sideload resistance
- Hard-Coat finish on all surfaces resists damage and extends cylinder life
- Floating center tube increases seal and product life
- Handles standard on all models
- Steel base plate and saddle for protection against load-induced damage
- Integral stop ring prevents plunger over-travel and is capable of withstanding the full cylinder capacity
- High strength return spring for rapid cylinder retraction.

一個RACH–306油缸由P–392手動泵提供動力，將廢品回收車車架上已被腐蝕的銷子拔出。
An RACH-306 powered by a P-392 hand pump used to extract corroded carriage pins of refuse collection vehicles.

單作用，鋁制中空柱塞油缸
Single-Acting,Aluminium Hollow Plunger Cylinders

Steel Base Plate Mounting Holes 鋼底座安裝孔			
油缸型號/承載能力 Cylinder Model / Capacity ton	螺栓分布圓直徑 Bolt Circle U (mm)	螺紋 Thread V (mm)	螺紋深度[1] Thread Depth [1] Z (mm)
RACH-20	80	M6	12
RACH-30	110	M6	12
RACH-60	160	M6	12
RACH-100	220	M10	12
RACH-150	245	M10	12

[1] Including Base Plate Height of 6 mm
[1] 包含6mm的底座高度。

鞍座
所有RACH油缸都配有帶螺紋的，中空可拆卸硬質鞍座。
Saddles
All RACH-cylinders are equipped with bolt-on hollow removable saddles of hardened steel.

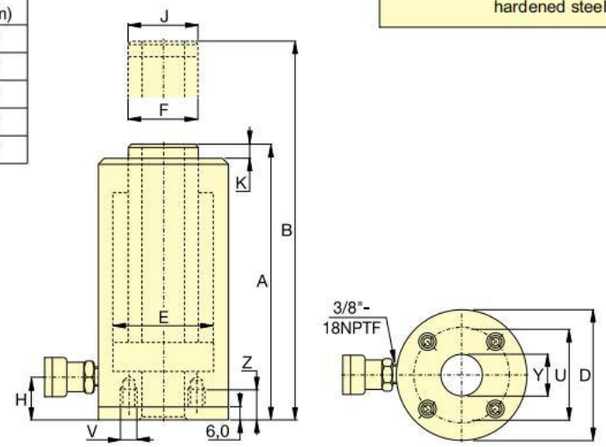

油缸承載能力 @ 700 bar Cylinder Capacity ton (kN)	行程 Stroke (mm)	型號 Model Number *	油缸有效面積 Cylinder Effective Area (cm²)	油量 Oil Capacity (cm³)	本體高度 Height A (mm)	伸展高度 Extended Height B (mm)	外徑 Outside Diameter D (mm)	油缸內徑 Cylinder Bore Diameter E (mm)	柱塞直徑 Plunger Diameter F (mm)	底部距進油口距離 Bottom to Advance Port H (mm)	鞍座直徑 Saddle Diameter J (mm)	鞍座距本體距離 Saddle Protrusion from Plunger K (mm)	中心孔直徑 Y (mm)	重量 (kg)	型號 Model Number *
20(229)	50	RACH-202	32.7	164	188	238	100	75	55	29	55	10	27	5.2	RACH-202
	100	RACH-204	32,7	327	251	351	100	75	55	29	55	10	27	6.1	RACH-204
	150	RACH-206	32.7	491	315	465	100	75	55	29	55	10	27	7.1	RACH-206
	200	RACH-208	32.7	654	378	578	100	75	55	29	55	10	27	8.0	RACH-208
	250	RACH-2010	32.7	818	442	692	100	75	55	29	55	10	27	9.0	RACH-2010
30(358)	50	RACH-302	51.1	256	208	258	130	95	70	29	70	10	34	8.0	RACH-302
	100	RACH-304	51.1	511	267	367	130	95	70	29	70	10	34	9.5	RACH-304
	150	RACH-306	51.1	766	333	483	130	95	70	29	70	10	34	11.2	RACH-306
	200	RACH-308	51.1	1022	395	595	130	95	70	29	70	10	34	12.9	RACH-308
	250	RACH-3010	51.1	1277	458	708	130	95	70	29	70	10	34	14.5	RACH-3010
60(596)	50	RACH-602	84.7	423	251	301	180	130	100	61	100	12	54	16,2	RACH-602
	100	RACH-604	84.7	847	315	415	180	130	100	61	100	12	54	19.5	RACH-604
	150	RACH-606	84.7	1270	380	530	180	130	100	61	100	12	54	25.6	RACH-606
	200	RACH-608	84.7	1694	445	645	180	130	100	61	100	12	54	26.0	RACH-608
	250	RACH-6010	84.7	2117	510	760	180	130	100	61	100	12	54	29.6	RACH-6010
100(1157)	50	RACH-1002	164.6	823	258	308	250	185	145	61	145	14	79	33.8	RACH-1002
	100	RACH-1004	164.6	1646	325	425	250	185	145	61	145	14	79	39.8	RACH-1004
	150	RACH-1006	164.6	2487	391	541	250	185	145	61	145	14	79	46.2	RACH-1006
	200	RACH-1008	164.6	3291	459	659	250	185	145	61	145	14	79	52.2	RACH-1008
	250	RACH-10010	164.6	4114	527	777	250	185	145	61	145	14	79	58.8	RACH-10010
150(1588)	50	RACH-1502	225.8	1129	280	330	275	205	150	61	145	14	79	48.9	RACH-1502
	100	RACH-1504	225.8	2258	360	460	275	205	150	61	145	14	79	55.7	RACH-1504
	150	RACH-1506	225.8	3387	430	580	275	205	150	61	145	14	79	63.0	RACH-1506
	200	RACH-1508	225.8	4517	500	700	275	205	150	61	145	14	79	70.1	RACH-1508
	250	RACH-15010	225.8	5646	570	820	275	205	150	61	145	14	79	77.2	RACH-15010

RACL–系列，鋁制螺母鎖定油缸
RACL-Series,Aluminium Lock Nut Cylinders

圖從左到右
from left to right:
RACL-1006, RACL-504, RACL-5010

- 鋁制螺母鎖定在油缸伸出時能機械鎖定負載
- 硬化鋼制擋圈延長油缸的使用壽命，防止5%的側面載荷
- 表面經過完全硬化處理，避免損壞，延長油缸使用壽命
- 所有型號的油缸都配有把手
- 鋼底座和鞍座防止加載引起的損壞
- 整體式擋圈防止柱塞過度伸長，并能承受油缸的最大頂升力
- 高强度回程彈簧使油缸能够快速回程
- 所有型號的油缸都配有CR–400快速接頭和防塵帽
- 所有型號的油缸均符合ASME B–30.1和ISO10100標準

- Aluminium Lock Nut provides mechanical load holding for extended periods
- Hardened steel stop ring increasing cylinder life and resistance to side-loads of up to 5%
- Hard-Coat finish on all surfaces resists damage and extends cylinder life
- Composite bearings increase cylinder life and side load resistance
- Handles included on all models
- Steel base plate and saddle for protection against load-induced damage
- Integral stop ring prevents plunger over-travel and is capable of withstanding the full cylinder capacity
- High strength return spring for rapid cylinder retraction
- CR-400 coupler and dustcap included on all models
- All cylinders meet ASME B-30.1 and ISO 10100 standards.

便携式螺母鎖定油缸RACL–1506用于橋梁加固工程中的長時間負載支撑。
The portable lock nut cylinder RACL-1506 used for extended load supports during epoxy injection for bridge reinforcement.

承載能力: Capacity:	20-150 ton
行程: Stroke:	50-250 mm
最大工作壓力: Maximum Operating Pressure:	700 bar

單作用，鋁制螺母鎖定油缸
Single-Acting,Aluminium Lock Nut Cylinders

Optional Bolt-on Tilt Saddle Dimensions (mm)
選配螺栓安裝的傾斜式鞍座尺寸 (mm)

油缸型號/承載能力 For Cylinder Model /Capacity ton	傾斜式鞍座型號 Tilt Saddle Model Number	傾斜式鞍座直徑 Tilt Saddle Diameter J1	鞍座突出柱塞高度 Saddle Protrusion from Plunger K1
RACL-50	CATG-50	50	24
RACL-100	CATG-150	91	31
RACL-150	CATG-200	118	35

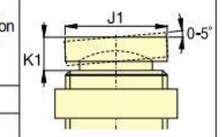

Steel Base Plate Mounting Holes
鋼底座安裝孔

油缸型號/承載能力 Cylinder Model / Capacity ton	螺栓分布圓直徑 Bolt Circle U (mm)	螺紋 Thread V (mm)	螺紋深度[1] Thread Depth [1] Z (mm)
RACL-20	70	M6	12
RACL-30	80	M6	12
RACL-50	110	M6	12
RACL-100	150	M10	12
RACL-150	200	M10	12

[1] Including Base Plate Height of 6 mm
[1] 包含6mm的底座高度。

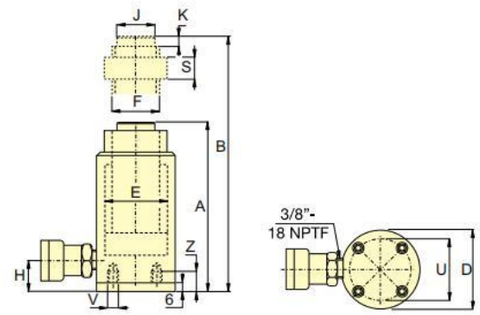

鞍座
所有RACL系列油缸都配有采用帶螺栓固定，可拆卸硬質鞍座。
Saddles
All RACL-cylinders are equipped with bolt-on removable hardened steel saddles.
For Tilt Saddles see next page.

油缸承載能力 @ 700 bar Cylinder Capacity ton (kN)	行程 Stroke (mm)	型號 Model Number *	油缸有效面積 Cylinder Effective Area (cm²)	油量 Oil Capacity (cm³)	本體高度 Height A (mm)	伸展高度 Extended Height B (mm)	外徑 Outside Diameter D (mm)	油缸內徑 Cylinder Bore Diameter E (mm)	柱塞直徑 Plunger Diameter F (mm)	底部距進油口距離 Bottom to Advance Port H (mm)	鞍座直徑 Saddle Diameter J (mm)	鞍座距本體距離 Saddle Protrusion from Plunger K (mm)	緊鎖螺母高度 S (mm)	重量 (kg)	型號 Model Number *
20 (218)	50	RACL-202	31.2	156	224	274	85	63	Tr 55 x 4	27	40	3	50	4.0	RACL-202
	100	RACL-204	31.2	312	274	374	85	63	Tr 55 x 4	27	40	3	50	4.6	RACL-204
	150	RACL-206	31.2	468	324	474	85	63	Tr 55 x 4	27	40	3	50	5.2	RACL-206
	200	RACL-208	31.2	624	374	574	85	63	Tr 55 x 4	27	40	3	50	5.8	RACL-208
	250	RACL-2010	31.2	780	424	674	85	63	Tr 55 x 4	27	40	3	50	6.4	RACL-2010
30 (309)	50	RACL-302	44.2	221	231	281	100	75	Tr 60 x 4	33	40	3	50	5.4	RACL-302
	100	RACL-304	44.2	442	281	381	100	75	Tr 60 x 4	33	40	3	50	6.1	RACL-304
	150	RACL-306	44.2	663	331	481	100	75	Tr 60 x 4	33	40	3	50	6.8	RACL-306
	200	RACL-308	44.2	883	381	581	100	75	Tr 60 x 4	33	40	3	50	7.5	RACL-308
	250	RACL-3010	44.2	1105	431	681	100	75	Tr 60 x 4	33	40	3	50	8.2	RACL-3010
50 (496)	50	RACL-502	70.9	354	236	286	130	95	Tr 80 x 4	30	50	3	50	9.3	RACL-502
	100	RACL-504	70.9	709	286	386	130	95	Tr 80 x 4	30	50	3	50	10.6	RACL-504
	150	RACL-506	70.9	1063	336	486	130	95	Tr 80 x 4	30	50	3	50	11.9	RACL-506
	200	RACL-508	70.9	1417	386	586	130	95	Tr 80 x 4	30	50	3	50	13.2	RACL-508
	250	RACL-5010	70.9	1771	436	686	130	95	Tr 80 x 4	30	50	3	50	14.5	RACL-5010
100 (1002)	50	RACL-1002	143.1	716	296	346	180	135	Tr 110 x 6	46	94	3	75	21.9	RACL-1002
	100	RACL-1004	143.1	1431	346	446	180	135	Tr 110 x 6	46	94	3	75	24.2	RACL-1004
	150	RACL-1006	143.1	2147	396	546	180	135	Tr 110 x 6	46	94	3	75	26.5	RACL-1006
	200	RACL-1008	143.1	2863	446	646	180	135	Tr 110 x 6	46	94	3	75	28.8	RACL-1008
	250	RACL-10010	143.1	3578	496	746	180	135	Tr 110 x 6	46	94	3	75	31.1	RACL-10010
150 (1589)	50	RACL-1502	227.0	1135	323	373	230	170	Tr 140 x 6	51	113	3	80	32.2	RACL-1502
	100	RACL-1504	227.0	2270	373	473	230	170	Tr 140 x 6	51	113	3	80	36.2	RACL-1504
	150	RACL-1506	227.0	3405	423	573	230	170	Tr 140 x 6	51	113	3	80	40.2	RACL-1506
	200	RACL-1508	227.0	4540	473	673	230	170	Tr 140 x 6	51	113	3	80	44.2	RACL-1508
	250	RACL-15010	227.0	5675	523	773	230	170	Tr 140 x 6	51	113	3	80	48.2	RACL-15010

P–系列，手動液壓泵
P-Series,Hand Pumps

油箱容量:
Reservoir Capacity: **655-7423cm³**

額定壓力下流量:
Flow at Rated Pressure: **2.46-4.75cm³/stroke**

最大工作壓力:
Maximum Operating Pressure: **700 bar**

- 雙速操作，可減少操作者勞動强度。
- P–84和P–464配有4通閥，可用于操作雙作用油缸。
- 其它型號上采用外部卸荷閥，用于操作單作用液壓缸。
- 内置安全閥用于過載保護。
- 油箱容量大，能够匹配的油缸和工具範圍廣。
- 雙速–在液壓柱塞須快速伸出接觸重物的場合以及需要大油量的場合，如同時推動多個液壓缸，推薦使用。

- Two-speed operation,can reduce the intensity of the operator.
- P-84 and P-464 are equipped with 4-way valve,they can be used to operate the double action cylinders.
- Other models are equipped with external unloading valve,they can be used to operate the single action cylinders.
- The inernal safety valve is equipped to protect the pump while overloading.
- The capacity of oil tank is big enough to match a wide range of cylinders and tools.
- Two-speed is to be used in the situation of hydraulic pommel should reach the heavy object quickly or need a great quantity fuel.For example,driving two or more hydraulic cylinders is recommended to use it.

泵的類型 Pump Type	可用油容量 Usable Oil Capacity (cm³)	型號 Model Number	額定壓力** Pressure Rating** (bar) 1st stage 1st 階段	額定壓力** 2nd stage 2nd 階段	每行星排油量 Oil Displacement per Stroke (cm³) 1st stage 1st 階段	每行星排油量 2nd stage 2nd 階段	最大手柄操作力 Max. Handle Effort (kg)
雙速 Double speed	655	P-392	25	700	15	2.62	50
	2200	P-80	25	700	16.22	2.46	47
	2200	P-84	25	700	16.22	2.46	47
	7423	P-462	14	700	126.20	4.75	49
	7423	P-464	14	700	126.20	4.75	49

手動液壓泵
Hand Pumps

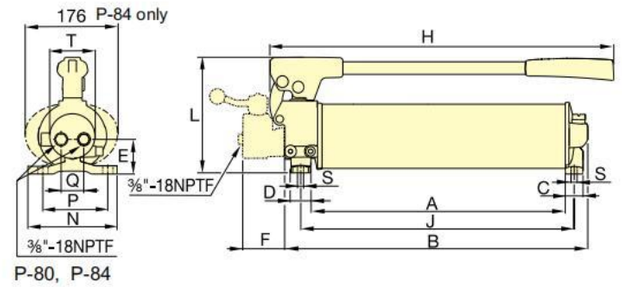

P-80, P-84

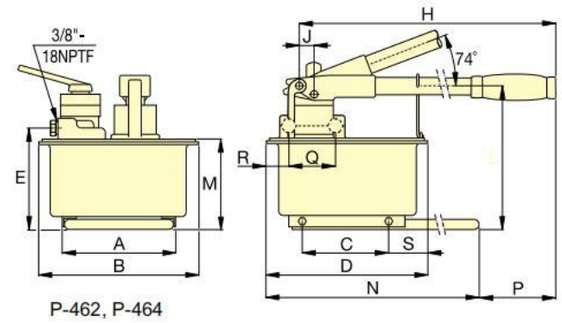

P-462, P-464

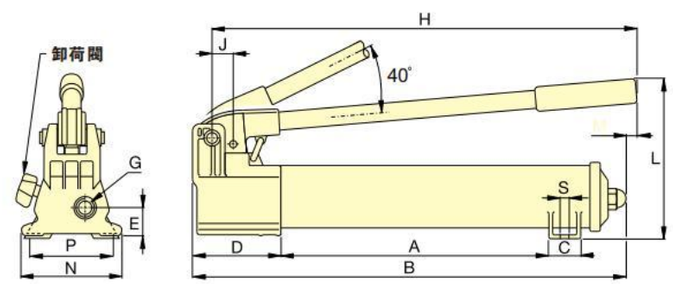

P-392

尺寸（mm）

液壓油缸–泵套件爲方便您的訂購，所帶*號的液壓缸都可成套供應（包括液壓缸，壓力表，接頭，軟管和泵）。

Cylinder-Pump Sets All cylinders marked with an * are available as sets (cylinder, gauge, couplers, hose and pump) for your ordering convenience.

活塞行程 Piston Stroke (mm)	尺寸 (mm) Dimensions A	B	C	D	E	F	H	J	L	M	N	P	Q	R	S	T	重量 (kg)	型號 Model Number
20.6	393	520	33	38	32	–	464	30	119	65	133	–	–	–	–	–	5.9	P-392
25.4	425	539	25	44	54	–	527	29	174	19	146	121	–	21	8	67	10.9	P-80
25.4	425	510	25	44	–	64	527	29	174	19	146	121	38	43	8	67	13.2	P-84
38.1	210	308	163	320	195	–	671	25	270	175	650	92	–	–	80	–	27	P-462
38.1	210	308	163	320	195	–	671	25	270	175	650	92	89	68	80	–	27.7	P-464

圓鋼切斷器專用泵
Round Steel Cutter Pump

PEA1-8-220

油箱容量: Reservoir Capacity:	10.0 L
額定壓力下流量: Flow at Rated Pressure:	1.0-9.0L/min
電動機規格: Flow at Rated Pressure:	1.3 KW
最大工作壓力: Maximum Operating Pressure:	700 bar

- 本機采用220V、50HZ電源，方便使用
- 采用德國原裝進口電磁閥、進口柱塞，經久耐用
- 整機輕量化設計，方便携帶
- 外置壓力可調，方便直觀

- Processed with 220V,50HZ power,easy to use
- Adopted Germany imported electromagnetic valve and plunger,reliable and longlasting
- Ligtweight design makes the complete machine easy to take with
- It's easy and visual to operate because the extemal pressure is adjustable

泵類型 Pump Type	型 號 Model Number	電 壓 Voltage (V)	頻 率 Frequency (Hz)	儲油量 Oil reserves (L)	功 率 Power (Kw)	壓 力 Pressure (bar)	低壓流量 Low-flow (L/min)	高壓流量 High-flow (L/min)	重 量 (kg)	外形尺寸 Dimensions (mm)
圓鋼切斷器專用泵 Round Steel Cutter Pump	PEA1-8-220	220	50	10	1.3	700	9	1.0	25	310×300×520

液壓油缸專用泵
Hydraulic Cylinder Pump

PEA2-20-220B

油箱容量: Reservoir Capacity:	20.0 L
額定壓力下流量: Flow at Rated Pressure:	1.0-9.0L/min
電動機規格: Flow at Rated Pressure:	1.3KW
最大工作壓力: Maximum Operating Pressure:	700 bar

- 本機采用220V、50HZ電源，方便使用
- 可同時使用2臺單作用千斤頂
- 整機輕量化設計，方便携帶
- 外置壓力可調，方便直觀

- Processed with 220V,50HZ power,easy to use
- It can be employed in 2 pcs jacks at same time
- Ligtweight design makes the complete machine easy to take with
- It's easy and visual to operate because the extemal pressure is adjustable

泵類型 Pump Type	型 號 Model Number	電 壓 Voltage (V)	頻 率 Frequency (Hz)	儲油量 Oil reserves (L)	功 率 Power (Kw)	壓 力 Pressure (bar)	低壓流量 Low-flow (L/min)	高壓流量 High-flow (L/min)	重 量 (kg)	外形尺寸 Dimensions (mm)
液壓油缸專用泵 Hydraulic Cylinder Pump	PEA2-20-220B	220	50	20	1.3	700	9	1.0	30	410×340×530

CTE-25AG(單回路)
CTE-25AG Single acting

油箱容量: Reservoir Capacity:	4.0 L
額定壓力下流量: Flow at Rated Pressure:	0.32-3L/min
電動機規格: Flow at Rated Pressure:	0.75KW
最大工作壓力: Maximum Operating Pressure:	700 bar

設計新穎，配備符合科學理論
Novel Design and Equip with scientific theory

- 充油式壓力表可以正確讀出工作者的要求，標準出力可以正確顯示壓力，避免使用超過負荷而破壞工具。
- 電動式單雙動液壓泵，泵浦輸出壓力700kg/cm2(10000PSI)
- 電壓指示燈，泵浦顯示電源已進入機臺
- 保險絲：電源過大負荷時，保護馬達與機臺安全
- 記憶器：內部裝設有一組次數使用記憶器，可以精確讀出記載您一年或五年工作使用次數，提供產品保養，壽命品質參考
- 專用油：保養與使用泵浦專用油，一年至少更換機油一次，請采用R-32特級循環油，不可使用錯誤的機油以免造成泵浦破壞

- Oil filled pressure gauge can read correct requirements of the workers, the standard output can indicate correct pressure. So it can avoid to be broken because of overloading. The output pressure of Single and Double action hydraulic pump is 700kg/cm^2(10000PSI)
- Voltage indicator, the power has entered in the machine.
- Fuse: to protect the motor and machine safety while the power overloading.
- Memory: The internal is equipped with a set memory to indicate the times of using in one year or five years, and provide maintenance of product and lifetime reference.
- Special oil: It must change the oil at least one time in a year, and please use the R-32 super special cycle oil and do not use the wrong oil to avoid breaking pump.

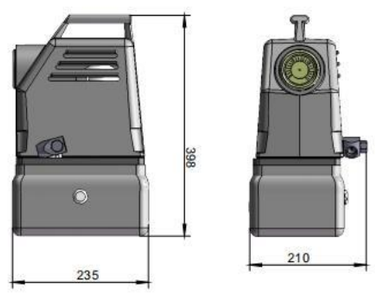

泵類型 Pump Type	型 號 Model Number	回油方式 way return to oil	儲油量 Oil reserves (L)	電機功率 Power (kW)	適用電壓 Applied Voltage (V)	低壓流量 Low-flow (L/min)	高壓流量 High-flow (L/min)	重 量 (kg)	外形尺寸 Dimensions (mm)
電動液壓泵 Electric Hydraulic Pump	CTE-25AG	單回路 Single acting	4	0.75	220	3	0.32	16	235×210×398

CTE-25AS(雙回路)
CTE-25AS Double Acting

油箱容量: Reservoir Capacity:	4.0 L
額定壓力下流量: Flow at Rated Pressure:	0.32-3 L/min
電動機規格: Flow at Rated Pressure:	0.75KW
最大工作壓力: Maximum Operating Pressure:	700 bar

- 充油式壓力表可以正確讀出工作者的要求，標準出力可以正確顯示壓力，避免使用超過負荷而破壞工具。
- 電動式單雙動液壓泵，泵浦輸出壓力700kg/cm2(10000PSI)
- 電壓指示燈，泵浦顯示電源已進入機臺
- 保險絲：電源過大負荷時，保護馬達與機臺安全
- 記憶器：內部裝設有一組次數使用記憶器，可以精確讀出記載您一年或五年工作使用次數，提供產品保養，壽命品質參考
- 專用油：保養與使用泵浦專用油，一年至少更換機油一次，請采用R-32特級循環油，不可使用錯誤的機油以免造成泵浦破壞

- Oil filled pressure gauge can read correct requirements of the workers, the standard output can indicate correct pressure. So it can avoid to be broken because of overloading. The output pressure of Single and Double action hydraulic pump is 700kg/cm^2(10000PSI)
- Voltage indicator, the power has entered in the machine.
- Fuse: to protect the motor and machine safety while the power overloading.
- Memory: The internal is equipped with a set memory to indicate the times of using in one year or five years, and provide maintenance of product and lifetime reference.
- Special oil: It must change the oil at least one time in a year, and please use the R-32 super special cycle oil and do not use the wrong oil to avoid breaking pump.

泵類型 Pump Type	型 號 Model Number	回油方式 way return to oil	儲油量 Oil reserves (L)	電機功率 Power (kW)	適用電壓 Applied Voltage (V)	低壓流量 Low-flow (L/min)	高壓流量 High-flow (L/min)	重 量 (kg)	外形尺寸 Dimensions (mm)
電動液壓泵 Electric Hydraulic Pump	CTE-25AS	雙回路 Double Acting	4	0.75	220	3	0.32	17	235×310×398

FS系列，液壓法蘭分離器
FS-Series, Hydraulic Flange Spreaders

- 輕型宜人的設計便易使用
- 從70–216mm的可調尖端寬度，應用範圍廣
- 單作用、彈簧回位RC – 系列液壓缸利于快捷、無故障操作

- Lightweight,ergon omic design for ease of use
- Adjustable jaw widths from 70 mm to 216 mm for a wide range of applications
- Single-acting, spring return RC-Series cylinders for fast trouble-free operation.

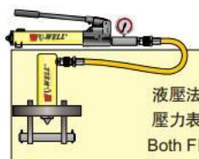

液壓法蘭破切器可成套提供（泵、工具、壓力表、壓力表適配器、接頭以及軟管），方便訂購。
Both Flange Spreaders are available as sets (pump, tool, gauge, gauge adaptor, couplers and hose) for your ordering convenience.

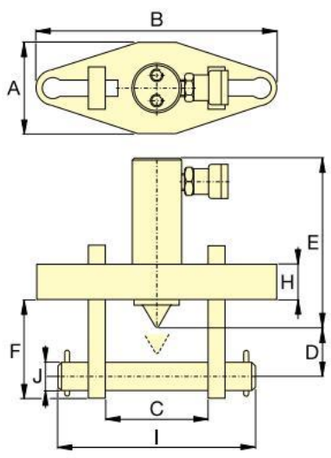

最大法蘭厚度 Maximum Flange Thickness (mm)	螺栓尺寸 Stud Size (mm)	標準 Standard Wedge (mm)	工作能力 Capa-city ton	行程 Stroke (mm)	油容量 Oil Capa-city (cm³)	型號 Model Number	Dimensions 尺寸 (mm) A	B	C Min.	C Max.	D	E	F	H	I	J	(kg)
2 x 57	19 - 28	3 - 28	5	38	24.6	FS-56	76	209	70	155	32	196	88	25	206	19	11.5
2 x 92	31- 41	3 - 28	10	54	78.7	FS-109	108	279	104	216	50	152	114	38	273	31	18.1

液壓與機械法蘭分離器
Hydraulic and Mechanical Wedge Spreaders

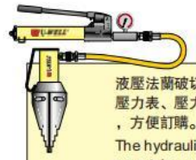

液壓法蘭破切器可成套提供（泵、工具、壓力表、壓力表適配器、接頭以及軟管），方便訂購。
The hydraulic flange spreader is available as set (pump, tool, gauge, gauge adaptor, couplers and hose) for your ordering convenience.

工作能力: Capacity:	5 -10ton	尖端厚度/最大分開距離: Tip Clearance / Maximum Spread :	6mm/81mm
擴張寬度: Spread:	70-216mm	最大分離力: Maximum Spread Force:	8-14ton
最大工作壓力: Maximum Operating Pressure:	700 bar	最大工作壓力: Maximum Operating Pressure:	700 bar (FSH-14)

臺階墊塊FSB–1
使用臺階墊塊可將法蘭分離器開口距離增加至81mm。可與FSH – 14和FSM – 8配合使用。

Stepped Blocks FSB-1
Use stepped blocks to increase wedge opening up to 80 mm. Fits both FSH-14 and FSM-8.

與FSH–14法蘭分離器一起分離并維修法蘭。
Separate and repair flange with FSH-14 flange separator.

- 適用于維護、檢修、測試和閥門更換應用
- 整體分離楔概念：無摩擦、平行平滑運動，消除法蘭損傷和分離楔損壞的危險
- 獨特的互鎖楔子設計 – 第一級無彎曲無滑脫危險
- 插入口要求僅爲6mm
- 臺階形張臂的設計使每格臺階可承受滿負荷
- 較少的運動部件，經久耐用，維護方便

- For maintenance, commissioning, shutdowns, testing and valve change outs
- Integrated wedge concept: Friction-free, smooth and parallel wedge movement eliminates flange damage and spreading arm failure
- Unique interlocking wedge design - no first step bending and risk of slipping out of joint
- Requires very small access gap of only 6 mm
- Stepped spreader arm design - each step can spread under full load
- Few moving parts mean durability and low maintenance

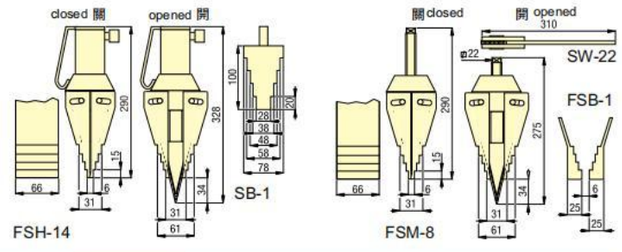

最大分離力 Maximum Spreading Force ton (kN)	厚度 Model Number	尖端厚度 Tip Clearance (mm)	最大分距 [1] Maximum Spread [1] (mm)	類型 Spreader Type	油容積 Oil Capacity (cm³)	(kg)
14 (125)	FSH-14*	6	81	液壓式 Hydraulic	78	7.1
8 (72)	FSM-8	6	81	機械式 Mechanical	–	6.5

[1] 使用臺階墊塊 FSB–1
[1] Using stepped blocks FSB-1
* Available as pump-tool set, see note on this page.

NS系列 液壓螺母破切器
NS-Series, Hydraulic Nut Splitters

强勁、精確高性能螺母破切器
Power and Precision High Performance Nut Splitter

刀片切割深度刻度
切割深度刻度可調，刀片伸出可控，避免損害螺栓螺紋。刻度分別以公制和英制爲單位顯示每個切割頭的螺栓範圍。
Blade Cutting Depth Scale
Adjustable cutting depth scale for controlled blade extension, which avoids damage to bolt threads.The scale indicates the bolt rangeinmetricandimperialvaluesoneachcutting head.

液壓螺母破切器可可成套提供（泵、工具、壓力表、壓力表適配器、接頭以及軟管），方便訂購。
Hydraulic Nut Splitters are available as sets (pump, tool, gauge, gauge adaptor, couplers and hose) for your ordering convenience.

工作能力: Capacity:	917-1711kN	工作能力: Capacity:	49-882kN(5-90ton)
六角螺母範圍: Hexagon Nut Size:	70-130mm	螺栓範圍: Bolt Range:	M6-M48
螺栓範圍: Bolt Range:	M45-M90	最大工作壓力: Maximum Operating Pressure:	700 bar
最大工作壓力: Maximum Operating Pressure:	700 bar		

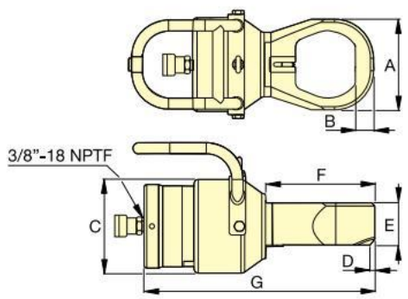

- 專爲ANSI B16.5 / BS1560 標準法蘭設計
- 單作用，彈簧回位
- 刀頭采用三刃設計，一個刀頭可提供三個刀刃
- 可更換的工作頭提供了最大限度的螺母適應性
- 刀頭伸長距離可方便預設，確保螺母破切的同時不損壞螺栓
- 牢固的手柄使工作更可靠、操作更加便利
- 缸體鍍鎳處理，保護工具不受腐蝕及惡劣環境影響
- 內置安全閥提供過載保護

- Specially designed to suit standard ANSI B16.5 / BS1560 flanges
- Single-acting (spring return) or double-acting cylinder
- Tri-blade technology provides three cutting surfaces on a single blade
- Interchangeable heads provide maximum nut range flexibility
- Preset scale allows controlled blade extension,which avoids damage to bolt threads
- Grip tape and handle included for more secure manoeuvrability
- Nickel-plated cylinder body for excellent corrosion protection and improved durability in harsh environments
- Internal Pressure Relief Valve for overload protection

使用NS 系列螺母破切器可以輕易地切除受到嚴重腐蝕與風化螺母。

Heavily corroded and weathered nuts are quickly split and removed using a NS-Series Nutsplitter.

選擇表 NUT SPLITTER SPECIFICATIONS

六角螺母範圍 Bolt Range (mm)	螺栓尺寸範圍 Hexagon Nut Range (mm)	工作能力 Capacity ton (kN)	油容量 Oil Capacity (cm³)	破切器型號 Model Number	外形尺寸 (mm) Dimensions A	B	C	D	E	F	G	(kg)	NS油缸 3) Hydraulic Cylinder	NS工作頭 3) Cutting Head	備用刀頭 Replace-ment Blade
M45 - M52	70 - 80	103 (917)	377	NS-7080	132	28	180	8.0	81	186	412	37.0	NSC-70	NSH-7080	NSB-70
M45 - M56	70 - 85	103 (917)	377	NS-7085	145	30	180	8.0	81	196	422	37.0	NSC-70	NSH-7085	NSB-70
M45 - M64	70 - 95	103 (917)	377	NS-7095	160	32	180	8.0	81	201	432	38.5	NSC-70	NSH-7095	NSB-70
M45 - M72	70 - 105	103 (917)	377	NS-70105	174	35	180	9.0	81	209	443	39.5	NSC-70	NSH-70105	NSB-70
M76 - M80	110 - 115	193 (1711)	819	NS-110115	189	36	234	3.7	111	234	472	69.0	NSC-110	NSH-110115	NSB-110
M76 - M90	110 - 130	193 (1711)	819	NS-110130	219	41	234	2.5	111	242	493	71.5	NSC-110	NSH-110130	NSB-110

NC系列 液壓螺母破切器
NC-Series, Hydraulic Nut Splitters

- 緊凑宜人的設計，使用方便
- 獨特的角度頭設計
- 單向作用彈簧回位液壓缸
- 可重新研磨重型刀頭
- 適合各種應用：卡車維修、管道工業、槽罐清理、石油化工、鋼鐵建築、采礦等等。

- Compact and ergon omic design, easy to use
- Unique angled head design
- Single-acting, spring return cylinder
- Heavy duty chisels can be reground
- Nut Splitters include spare chisel, spare set screw and wrench used to secure the chisel.
- Applications include service trucks, piping industry, tank cleaning, petrochemical, steel construction, mining, etc.

在鐵軌上很輕易地將生銹的螺母切掉這僅僅是優偉螺母破切器的一種應用。
Easily removing rusty nuts during railroad construction is just one of many application examples for the U-WELL Nut Splitter.

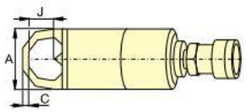

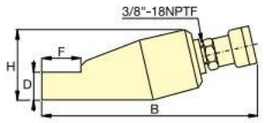

螺釘範圍 Bolt Range (mm)	六角螺母範圍 Hexagon Nut (mm)	工作能力 Capacity ton (kN)	油容量 Oil Capacity (cm³)	型號 Model Number	尺寸 Dimensions (mm) A	B	C	D	F	H	J	(kg)	備用刀頭型號 Replacement Chisel Model Number
M6 - M12	10 - 19	5 (49)	15	NC-1319	40	170	7	19	28	48	21	1.2	NCB-1319
M12 - M16	19 - 24	10 (98)	20	NC-1924*	54	191	10	26	40	62	25	2.0	NCB-1924
M16 - M22	24 - 32	15 (147)	60	NC-2432*	64	222	13	29	51	72	33	3.0	NCB-2432
M22 - M27	32 - 41	20 (196)	80	NC-3241*	75	244	17	36	66	88	43	4.4	NCB-3241
M27 - M33	41 - 50	35 (343)	155	NC-4150	94	288	21	45	74	105	54	8.2	NCB-4150
M33 - M39	50 - 60	50 (490)	240	NC-5060	106	318	23	54	90	128	60	11.8	NCB-5060
M39 - M48	60 - 75	90 (882)	492	NC-6075	156	393	26	72	110	181	80	34.1	NCB-6075

液壓提升器
Hydraulic Spreader

- 最小安裝間隙10mm
- 700bar壓力時頂升力16噸
- 每一階梯都可以滿負荷承載
- 垂直頂升
- 獨一無二的聯鎖鍥形設計
- 單作用、彈簧復位
- 包括安全墊塊 SB–2

- Requires very small access gap of only 10mm
- Lifting force 16 ton at 700 bar hydraulic pressure
- Each step can spread under full load Straight vertical lifting
- Unique interlocking wedge design:no first step bending and risk of slipping out
- Single-acting,spring return cylinder
- Lifting wedge LW-16 includes safety block SB-2

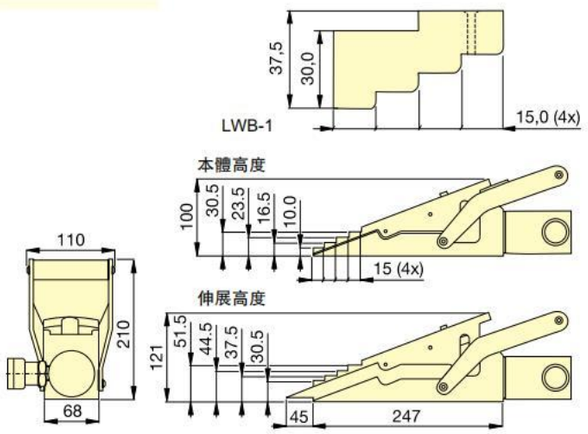

For lifting heavy equipment with minimum floor clearance the LW-16 is the ideal tool.

LW–16適用于狹小空間頂升重型設備。

最大頂升壓力 Maximum Lifting Force ton (kN)	行程 Lifting Stroke (mm)	型號 Model Number	最小間隙 Tip Clearance (mm)	最大工作壓力 Maximum Operating Pressure (bar)	油量 Oil Capacity (cm^3)	(kg)
16 (157)	21	LW-16	10	700	78	9.0

使用臺階墊塊LWB–1，可增加頂升高度30mm。
*使用 LWB–1.
Use optional stepped block LWB-1 to increase wedge lifting height by 30 mm.
* Using LWB-1.

PH 系列車載拉馬
PH-Series, Hydraulic Heavy Duty Puller

最大頂升能力: Maximum Lifting Force:	16 ton (157kN)	工作能力: Capacity:	55 T
頂升行程: Lifting Stoke:	21mm	伸距: Reach:	280-720mm
最小間隙/最大頂升高度: Tip Clearance/Maximum Spread*:	10mm/81.5mm	張距: Spread:	75mm
最大工作壓力: Maximum Operating Pressure:	700 bar	最大工作壓力: Maximum Operating Pressure:	700 bar

實踐證明
拉馬由于具有25mm水平調節，5度垂直調節，可以很好的準確對中。

快速
使用電動液壓泵，速度快捷省操作時間，由鎖定系統鎖定。

堅固耐用
拉馬爪采用高强度合金鋼鍛造而成。

Practice has Proved
Due to the horizontal adjustment of 25mm and the vertical adjustment of 5°, the Lamar can be well centered.
Fast
Use electric hydraulic pump, fast speed and save operation time, locked by the locking system.
Strong and Durable
The claw is forged from high strength alloy steel.

用于拆卸傳動部件，例如：軸承、離合器、襯套、齒輪等。
同步式爪鈎結構，采用一體式泵汗浦操作以提供安全，準備及油壓緊固的壓力，攫住工件。
自動中心校正結構，可確保主體油缸對準中心綫且爪鈎系統均等的攫住待拆卸之工件。
同步式爪鈎結構，可確保爪鈎不鬆脱或是在工件被拆卸的瞬間，鎖産生之反作用力彈開。
2爪與3爪，可互換式使用的爪鈎結構。
獨特的角度調整設計，可調整拉馬中心綫之仰角與俯角各五度；方便使用者作精確的中心綫定位。
車輪采用360度旋轉設計，以利使用者輕便的操控。
油缸主體，采用兩段式揚伸專利設計：第一段，爲低壓快速揚伸，可節省心軸揚伸時間，第二段，當心軸與工件之軸心相接觸後，自動轉換爲高壓出力，以提供拆卸所需額定出力。
三種不同長度之延長杆，爲標準配備；可供使用者，依工作需求，自行搭配使用。

50T車載拉馬
50T Hydraulic Heavy Duty Puller

- Double-acting hydraulic system for holding, opening & closing jaws; provides safe and secure grip at all times.
- Single-acting, spring return, 50 Ton capacity cylinder.
- Self-centring design keeps puller jaws clamped evenly on the work pieceEasy jaw head adjusting system prevents puller jaws from sliding
- Puller can be assembled in 2 or 3 jaw configuration.
- Puller can be adjusted 5 degrees up or down of puller centreline for precise positioning
- Castors provide easy cart movement
- Includes electric pump – 220VAC single phase or 380VAC three phase options & four extensions

型號 Model	拉拔能力 Capacity Tonnes (T)	行 程 Stoke (mm)	最大張距 Max Spread (mm)	最小張距 Min Spread (mm)	最小深度 Min Reach (mm)	最大深度 Max Reach (mm)	油缸最高工作壓力 Maximum Operating Pressure (Mpa)	電動泵要求 Motor 電壓 Voltage (V)	頻率 Frequency (Hz)	功率 Power (KV)
PH553B	55	300	1250	75	665	720	70	AC 220	50	1.5
PH553C	55	300	1155	75	430	280	70	AC 220	50	1.5

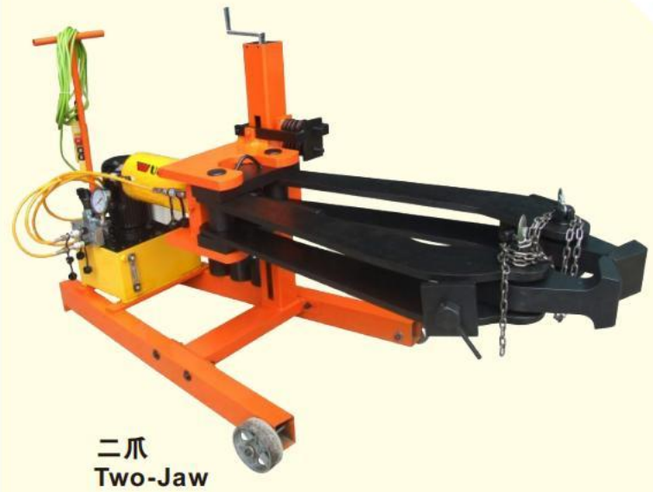

100T 車載拉馬/拔輪器(可配電動升降)
100T Hydraulic Heavy Duty Puller(Can be equipped with electric lifting)

超强度的合金鋼拉爪，有2爪拔輪結構系統，自動拉拔。
雙作用的液壓系統，很方便進行大型的孔軸類工件拆卸。如拔大齒輪、大軸承、聯軸器、皮帶輪等。
移動方便，調節簡單，操作靈活，安全保險，功效明顯。
主體油缸揚伸與回復，采用獨立電動液壓泵浦操控，可防止使用者操作錯誤，而產生危險。
油缸主體，采用兩鍛式揚伸專利設計；第一段，爲低壓快速揚伸，可節省心軸揚伸之時間，第二段，當心軸與工作之軸心相接觸後，自動轉換爲高壓出力，以提供拆卸所需額定出力。
不同長度之延長杆，可提供使用者依工作需求，自行搭配使用。

操作以安全第一，液壓能轉換成機械能的同時成噸的力施加于您的拉拔系統，您必須重視該力，始終遵守安全防範規則。
始終戴好防護眼鏡，保護眼睛免受可能飛出的部件傷害。
將您的拔輪器保持完好！經常清潔及潤滑拔輪器的加壓活塞及螺杆，從螺紋到頂尖，以保證延長使用壽命及正常操作。
始終用防護安全網蓋住工件，工件被拉拔時會產生很大的作用力在上面，有時會導致破裂(如多數皮帶輪等材質是生鐵爲主)，
可減低操作人員受飛出部件傷害的危險。
逐漸地施加拉力，不要嘗試在拔輪器加壓杆用動力扳手或延長生活費來加速拉拔。
盡可能用標準爪的拔輪器，較長拉爪會使拔輪器末端出力減少。

Practical
The puller is self-centering, easy to manoeuvre and adjustable in height.
The arms slide inwards or outwards simultaneously.
Flexible
The complete stroke is 250 mm. 3 adapters (extensions) included.
Strong
The harder the force, the tighter the jaws grip.
The arms cannot bend or deflect.
Safe
The integral safety release valve prevents overloading and ensures that you will never exceed the maximum power capacity.
Advantages
Prevents damage to shaft and object being pulled
One person can do the job Efficient and saves time
Including 3 adapters
Including remote control

型號 Model	拉拔能力 Capacity Tonnes (Ton)	行 程 Stoke (mm)	最大張距 Max Spread (mm)	最小張距 Min Spread (mm)	拉拔深度 Reach (mm)	電機參數 Motor Voltage (V/HZ)	中心調節高度 Center Adjustment Height (mm)	壓力表顯示 Pressure Gauge display (bar)	總長度 Total length (mm)	重 量 (Kg)
PH 1002	100	250	1219	381	860 - 1060	220/380/50	305 - 915	700	3015	550

PH 系列車載拉馬
PH-Series, Hydraulic Heavy Duty Puller

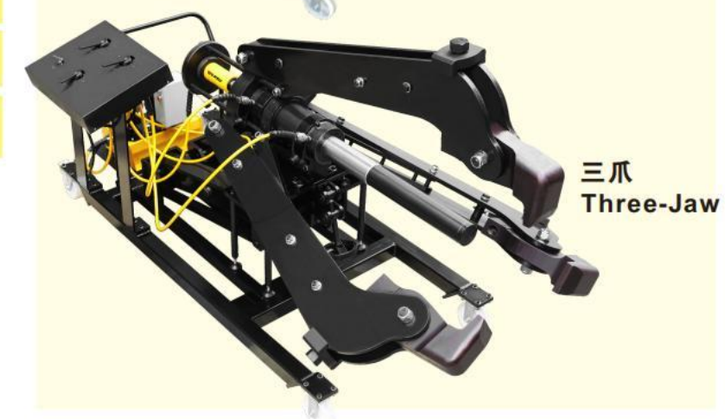

工作能力: Capacity:	933-1861kN
伸距: Reach:	803-880mm
張距: Spread:	140-1580mm
最大工作壓力: Maximum Operating Pressure:	700 bar

100T,200T
車載拉馬/拔輪器(可配電動升降)
100T,200T
Hydraulic Heavy Duty Puller
(Can be equipped with electric lifting)

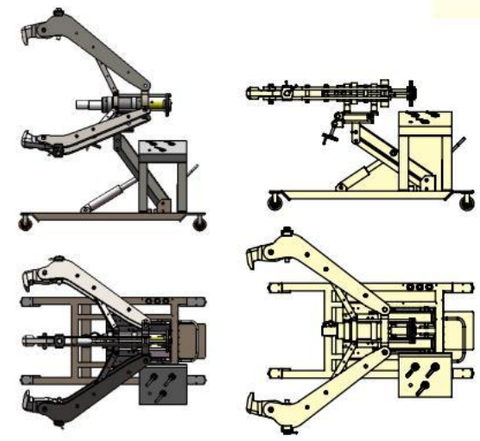

100T–3JAW車載式液壓拉馬，由液壓操縱來實現拉馬的垂直高度位置調整、鉗爪伸縮及工件拉拔。拉馬主要包括鉗爪機構、鉗爪伸縮機構、主油缸高度調整機構、一個滾輪推車及相應機構元件；液壓元件及系統爲700bar的超高壓液壓系統；當運輸拉馬時，應將拉馬放置在最低位置上，并卸掉鉗爪延伸器。

- Hydraulic lifting system.
- Flow metering system provides constant lowering speed.
- Double acting hydraulic system for holding, opening & closing jaws provides safe and secure grip at all times.
- Self Centring design keeps puller jaws clamped evenly on the work piece.
- Easy jaw head adjusting system prevents puller jaws from sliding.
- Puller can be assembled in 2 or 3 jaw configuration
- Castors provide easy cart movement.
- Includes 230V electric pump.

特別提醒：由于設計更新，不同批次產品面板布置有所不同，主要是伸縮油缸左右側顯示不同的動作，衹要按照面板標識進行操作即可。

Special reminder: due to the design update, different batches of product panel layout is different, mainly telescopic cylinder on the left and right side of the display of different actions, as long as in accordance with the panel logo can be operated.

型號 Model		拉拔能力 Capacity Tonnes (KN)	行 程 Stroke (mm)	最大張距 Max Spread (mm)	最小拉伸距 Min Reach (mm)	最小張距 Min Spread (mm)	最大拉伸距 Max Reach (mm)	主油缸 最小中心高度 Min Central Height (mm)	主油缸 最大中心高度 Max Central Height (mm)	重 量 (T)
二爪 Two-jaw	100 T	933	300	1535	880	150	1035	855	1490	1.1
	200 T	1861	300	1580	803	140	955	855	1490	1.25
三爪 Three-jaw	100 T	933	300	1535	880	150	1035	855	1490	1.4
	200 T	1861	300	1580	803	140	955	855	1490	1.6

拔輪器總覽
Puller Section Overview

液壓拔輪器

液壓拔輪器省時并避免不安全的撞擊、發熱或撬拔。使用液壓控制拔輪器可將對零部件的損壞降至最低。

Hydraulic Pullers

These hydraulic pullers eliminate time-consuming and unsafe hammering, heating or prying. Damage to parts is minimized through the use of controlled hydraulic power.

拔輪器功能 Puller Function	工作能力 Capacity ton	拔輪器類型 Puller Type	系列 Series	頁碼 Page
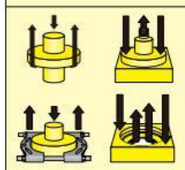	8-50	拔輪器標準套件 最大伸距: 252 – 700 mm 最大張距: 250 – 1100 mm Master Puller Sets Max. Reach:252 - 700 mm Max. Spread:250 - 1100 mm	BHP 5751G 拔輪器標準套件 Master Puller Sets	72 
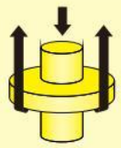	8-50	鉗爪式拔輪器 最大伸距: 249 – 700 mm 最大張距: 50 – 580 mm Grip Puller Sets Max. Reach:249 - 700 mm Max. Spread:50 - 580 mm	BHP 551G 鉗爪式拔輪器套件 Grip Puller Sets	73 
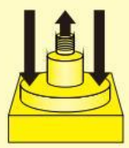	8-50	交叉定位拔輪器 最大伸距: 354 – 863 mm 最大張距: 266 – 570 mm Cross Bearing Puller Sets Max. Reach:354 - 863 mm Max. Spread:266 - 570 mm	BHP 561G 交叉定位拔輪器套件 Cross Bearing Puller Sets	74 
	8-50	軸承套拔輪器 最大寬度: 110 – 145 mm 最大張距: 26 – 359 mm Bearing Cup Pullers Max. Reach:110 - 145 mm Max. Spread:26 - 359 mm	BHP 軸承套拔輪器 Bearing Cup Puller	75 
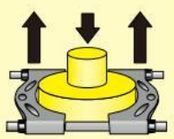	8-50	軸承拔輪器 最大寬度: 110 – 292 mm 最大張距: 10 – 245 mm Bearing Pullers Max. Width:110 - 264 mm Max. Spread:10 - 245 mm	BHP 軸承拔輪器 Bearing Puller	75 

選擇拔輪器時，必須考慮下面三個重要基本因素：

When selecting a puller it is important to consider 3 basic specifications:

1. 工作能力：

即拔輪器能够產生的力的大小。一般來講，一項任務所需要的工作能力可由被拉部件軸杆的直徑決定。

對于手動拔輪器，拔輪器中心螺杆的直徑至少應該爲被拔卸部件之軸杆的二分之一。對于液壓拔輪器，以噸計的工作能力應該爲軸杆直徑毫米數的0.28至0.40倍。

1. The Capacity:
Is the amount of force the puller is capable of producing.
Typically, the capacity required for a job can be determined by using the shaft diameter of the part being pulled.
For manual pullers, the center bolt diameter of the puller should be at least half the diameter of the shaft being pulled from.
For hydraulic pullers, the capacity in tons should be 0,28 to 0,4 times the shaft diameter in mm.

請使用下列圖表：
Use the following chart:

軸杆直徑 Shaft Diameter	拔輪器工作能力 Puller Capacity
0 - 25 mm	10 ton
25 - 50 mm	20 ton
50 - 89 mm	30 ton
89 - 140 mm	50 ton

2. 伸距：

指的是拔輪器基部至鉗爪平面間的距離。拔輪器的伸距必須等于或大雨被拔零部件相應部位尺寸。

2. The Reach:

is the distance between the bottom of the base and the jaw flats. The puller's reach must equal or exceed the same distance of the part being pulled.

3. 張距：

鉗爪之間的距離。拔輪器的張距需要比被拔零部件的寬度更大。

3. The Spread:

is the distance between the jaws. The puller's spread needs to be greater than the width of the part being pulled.

拔輪器標準套件
BHP-Series, Master Puller Sets

警告

在使用交叉定位拔輪器時（2個握持臂）或拔輪器爪鈎和軸承拉拔附件結合使用時，請勿超出拉具額定容量的50%。

WARNING

Do not exceed 50% of the rated puller capacity when using a double crosshead (2 grip arms) or when using puller legs in combination with bearing puller attachment.

拔輪器標準套件BHP–5751G
Master Puller Sets BHP-5751G

▼ 整個工業界的工程師都非常欣賞U-WELL的拔輪器標準套件。

Maintenance engineers throughout the industry greatly appreciate the U-WELL Master Puller sets

- 與完整的液壓套件一起提供，包括泵、軟管、液壓缸、壓力表、壓力表座以及木箱
- 所有拔輪器標準套件包括鉗爪式拔輪器、交叉定位拔輪器、軸承套拔輪器以及軸承拔輪器附件
- 高質鍛鋼部件提供優良的可靠性與服務
- 套件內包括選擇手柄與調節螺杆，用于在施加液壓力之前快速連接
- Supplied with a full hydraulic set including pump, hose,cylinder, gauge, gauge adaptor and wooden case
- High quality, forged steel components provide superior reliability and service
- Sets include speed crank and adjusting screw for fast contact to work before hydraulics are applied
- All Master Puller Sets include a Grip Puller, a Cross Bearing Puller, a Bearing Cup Puller and a BearingPuller Attachment, which can be ordered separately,see items nr. 10, 20 , 30 and 50.

▼ 選擇表 SELECTION CHART

拔輪器標準套件工作能力 * Master Puller Set Capacity *	8 ton	20 ton	30 ton	50 ton
型號 Model Number	BHP-1752	BHP-2751G	BHP-3751G	BHP-5751G
包含液壓件 Included Hydraulics 成套重量 Set Weight	37 kg	90 kg	172 kg	298 kg
• 手動泵 • Hand Pump	P-392	P-392	P-392	P-80
• 液壓缸 • Cylinder	RCH-1211	RCH-202	RCH-302	RCH-603
• 鞍座 • Saddle	–	HP-2015	HP-3015	HP-5016
• 軟管 • Hose	HB-7206QB	HC-7206	HC-7206	HC-7206
• 壓力表 • Gauge	GF-120B	GF-813B	GF-813B	GF-813B
• 壓力表座 • Gauge Adaptor	GA-3	GA-3	GA-3	GA-3
包含拔輪器配件 Included Pullers				
10 鉗爪式拔輪器	BHP-1762	BHP-252	BHP-352	BHP-552
20 交叉定位拔輪器	BHP-1772	BHP-262	BHP-362	BHP-562
30 軸承套拔輪器	BHP-180	BHP-280	BHP-380	BHP-580
40 軸承拔輪器	BHP-181	BHP-282	BHP-382	BHP-582
• 木箱	CM-6	CW-350	CW-350	CW-750

鉗爪式拔輪器套件
Grip Puller Sets

鉗爪式拔輪器套件BHP-551G
Grip Puller Sets BHP-551G

工作能力: Capacity:	8,20,30 and 50 ton
伸距: Reach:	252-700mm
張距: Spread:	249-1100mm
最大工作壓力: Maximum Operating Pressure:	700 bar

- 精密液壓控制實現快速、有效與安全的拉拔操作
- 高質鍛鋼部件提供優良的可靠性與服務
- 可以含或不含完整液壓套件的形式供應

- Precise hydraulic control allows fast, efficient and safe pulling
- High quality, forged steel components provide superior reliability and service
- Available with and without full hydraulic set.

▼ 選擇表 SELECTION CHART

鉗爪式拔輪器套件工作能力** Grip Puller Set Capacity**			8 ton	20 ton	30 ton	50 ton
		型號 Model Number	BHP-152	BHP-251G	BHP-351G	BHP-551G
包含液壓件 Included Hydraulics		成套重量 Set Weight	22 kg	56 kg	91 kg	160 kg
• 手動泵 • Hand Pump			P-392	P-392	P-392	P-80
• 液壓缸 • Cylinder			RCH-1211	RCH-202	RCH-302	RCH-603
• 鞍座 • Saddle			–	HP-2015	HP-3015	HP-5016
• 軟管 • Hose			HB-7206QB	HC-7206	HC-7206	HC-7206
• 壓力表 • Gauge			GF-120B	GF-813B	GF-813B	GF-813B
• 壓力表附件 • Gauge Adaptor			GA-3	GA-3	GA-3	GA-3
10 鉗爪式拔輪器 Grip Puller		型號 Model Number	BHP-1762*	BHP-252*	BHP-352*	BHP-552*
最大張距 (mm) Maximum Spread (mm)	2爪	2-jaw	249	400	593	899
	3爪	3-jaw	249	499	800	1100
最大伸距 (mm) Maximum Reach (mm)	2爪	2-jaw	252	300	387	700
	3爪	3-jaw	252	300	387	700
鉗爪 (mm) Jaw (mm)	厚度	Thickness	15	20	24	30
	寬度	Width	23	27	38	39
調節螺杆 (mm) Adjusting Screw (mm)	螺紋	Thread	¾"- 16 UNF	1"- 8 UNC	1¼"- 7 UNC	1 "- 5.5 UNC
	長度	Length	400	675	795	975
• 木箱 • Case			CW-166	CW-166	CW-350	CW-750

交叉定位拔輪器套件
Cross Bearing Puller Sets

機械交叉定位拔輪器、軸承套拔輪器以及軸承拔輪器可單獨訂購

The cross bearing puller without hydraulics, bearing cup puller and a bearing puller can be ordered separately, see items nr. 10 , 20 , 30 and 40.

交叉定位拔輪器套件BHP-561G
Cross Bearing Puller Sets BHP-561G

工作能力: Capacity:	8,20,30 and 50 ton
伸距: Reach:	354-863mm
張距: Spread:	266-570mm
最大工作壓力: Maximum Operating Pressure:	700 bar

- 精密液壓控制實現快讀、有效與安全的拉拔操作
- 高質鍛鋼部件提供優良的可靠性與服務

- Precise hydraulic control allows fast, efficient and safe pulling
- High quality, forged steel components provide superior reliability and service.

▼ 選擇表 SELECTION CHART

交叉定位拔輪器套件工作能力 Cross Bearing Puller Set Capacity			8 ton	20 ton	30 ton	50 ton
		型號 Model Number	BHP-162	BHP-261G	BHP-361G	BHP-561G
包括的液壓件 Included Hydraulics		成套重量 Set Weight	26 kg	62 kg	121 kg	185 kg
• 手動泵 • Hand Pump			P-392	P-392	P-392	P-80
• 液壓缸 • Cylinder			RCH-1211	RCH-202	RCH-302	RCH-603
• 鞍座 • Saddle			–	HP-2015	HP-3015	HP-5016
• 軟管 • Hose			HB-7206QB	HC-7206	HC-7206	HC-7206
• 壓力表 • Gauge			GF-120B	GF-813B	GF-813B	GF-813B
• 壓力表座 • Gauge Adaptor			GA-3	GA-3	GA-3	GA-3
20 交叉定位拔輪器 Cross Bearing Puller		型號 Model Number	BHP-1772	BHP-262	BHP-362	BHP-562
張距 (mm) Spread (mm)		最大 Maximum	266	351	454	570
		最小 Minimum	106	139	179	220
伸距 (mm) Reach (mm)		最大 Maximum	462	571	711	863
調節螺杆 (mm) Adjusting Screw (mm)		直徑 Diameter	¾"- 16 UNF	1"- 8 UNC	1¼"- 7 UNC	1 "- 5.5 UNS
		長度 Length	400	675	795	975
拉杆 (mm) Leg (mm)		長度 Length	105	239	203	609
		長度 Length	354	419	457	863
		長度 Length	–	571	711	–
		長度 Length	–	114	–	–
拉杆上端 (mm) Upper Leg Ends (mm)		螺紋 Thread	¾"- 16 x 25	¾"- 16 x 25	1-14 x 35	1¼"- 12 x 38
拉杆下端 (mm) Lower Leg Ends (mm)		螺紋 Thread	"- 18 x 25	"- 18 x 25	1-14 x 27	1¼"- 12 x 38
30 軸承套拔輪器 Bearing Cup Puller		型號 Model Number	BHP-180	BHP-280	BHP-380	BHP-580
40 軸承拔輪器 Bearing Puller		型號 Model Number	BHP-181	BHP-282	BHP-382	BHP-582
• 木箱 • Wooden Case			CM-6	CW-187	CW-350	MK-05

可單獨訂購的機械拔輪器組件。 Can be ordered separately without hydraulic components, see next page.

軸承套與軸承拔輪器
Bearing Cup and Bearing Pullers

軸承套拔輪器
Bearing Cup Puller

警告
在使用交叉定位拔輪器時（2個握持臂）或拔輪器爪鈎和軸承拉拔附件結合使用時，請勿超出拉具額定容量的50%。

WARNING
Do not exceed 50% of the rated puller capacity when using a double crosshead (2 grip arms) or when using puller legs in combination with bearing puller attachment.

工作能力: Capacity:	8,20,30 and 50 ton	工作能力: Capacity:	7,10,17,20,30,60 ton
伸距: Reach:	110-145mm	伸距: Reach:	225-727mm
張距: Spread:	110-359mm	張距: Spread:	60-920mm
最大工作壓力: Maximum Operating Pressure:	700 bar	最大工作壓力: Maximum Operating Pressure:	700 bar

▼ 選擇表 SELECTION CHART

工作能力 * Capacity *		8 ton	20 ton	30 ton	50 ton
30 軸承套拔輪器 Bearing Cup Puller					
型號 Model Number		BHP-180	BHP-280	BHP-380	BHP-580
張距 (mm) Spread (mm)	最大. Max.	110	220	359	359
	最小. Min.	26	25	50	50
伸距 (mm) Reach (mm)	最大. Max.	110	140	145	145
中心螺杆 Center Screw	螺紋 Thread	¾"- 16 UNF	1"- 8 UNC	1¼"- 7 UNC	1 "- 5.5

- 高强度合金鋼制造
- 與交叉定位拔輪器適配便易，用于快速有效拆卸大多數難于拆卸的部件
- 可調節成適合不同的軸承與密封

- Made of high strength steel alloy
- Easily adapted to Cross Bearing Pullers for fast and efficient removal of the most difficult parts
- Adjustable to fit a variety of bearings and seals.

軸承拔輪器
Bearing Puller

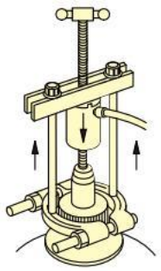

圖爲軸承拔輪器與交叉定位拔輪器配合使用。

Bearing puller With cross-positioning pullerUse together.

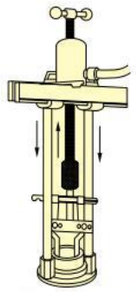

圖爲軸承套拔輪器與交叉定位拔輪器配合使用。

Bearing sleeve puller With cross-positioning pullerUse together.

▼ 選擇表 SELECTION CHART

工作能力 *		8 ton	20 ton	30 ton	50 ton
40 軸承拔輪器 Bearing Puller					
型号	Model Number	BHP-181	BHP-282	BHP-382	BHP-582
張距 (mm) Spread (mm)	最大. Max.	104	130	245	245
	最小. Min.	25	9	17	17
寬度 (mm) Width (mm)		126	150	292	292
螺紋 Thread		"-18 UNF	"- 18 UNF	1"- 14 UNS	1¼"- 12 UNF

* 此拔輪器的工作能力非爪勾額定負載。見此頁“警告”。
* Puller capacity, not attachment capacity. See warning on this page.

- 高强度合金鋼制造
- 楔形邊緣可以用于拆卸多數難以鉗夾的部件
- 與交叉定位拔輪器適配，用于快速有效拆卸多數難以拆卸的部件

- Made of high strength steel alloy
- Wedge-shaped edges steel alloy hard-to-grip components
- Easily adapted to Cross Bearing Pullers for fast and efficient removal of the most difficult parts.

機械/液壓自對中拉馬
Mechanical / Hydraulic Self-centering Puller

液壓式
Hydraulic

- 三爪聯動，自動對中，使用方便快捷
- 拉馬爪由高强度合金鋼鍛造而成，堅固耐用
- 此系列有機械、液壓兩種選擇，噸位從7噸至60噸

- Three claws linkage,autamatical locate centerline,easy to use.
- It is made of high-strength alloy steel to be durable.
- It has types:mechanics and hydraulic,tonnage ranges from 7 ton to 60 ton.

機械式
Mechanical

類別 Type	型號 Model	工作能力 Capacity ton (kN)	最大伸距 Maximum Spread A(mm)	張距範圍 Spread Range B(mm)	手動泵型號 Hand Pump model	油缸型號 Cylinder model	重量 (kg)
機械式 Mechanical	JXDZ-7	7(69)	225	60-280	-	-	4.5
	JXDZ-10	10(98)	385	60-430			10.5
	JXDZ-20	17(196)	480	60-500			25.5
	JXDZ-30	30(294)	585	60-600			5.8
液壓式 Hydraulic	YZDZ-10	10(98)	296	60-430	P-392	RCH-123	8.9
	YZDZ-20	20(196)	340	60-500	P-392	RCH-202	18.25
	YZDZ-30	30(294)	420	60-600	P-392	RCH-302	36.4
	YZDZ-60	60(588)	727	60-920	P-80	RCH-603	86.5

YL 系列，分體式液壓三爪拉馬
YL-Series, Split Hydraulic Three-jaw Puller

- 利用新型液壓拉馬操作方便。
- 三爪式和二爪式可根據現場工作需要拆換。
- 可以自由旋轉按拉馬距離活塞中心點，很快可碰到被拉工件中心點。
- 可自由選配液壓泵浦P–180,P–392,P–80.
- 爪子附三爪，高低可任意調整。

Practical:
Self-centering, easy to convert, 2- or 3-arm puller.
The arms slide inwards or outwards simultaneously.
Safe:
Arms can never deflect!Economical:2/3-arm combination puller, 2 pullers for the price of one.
Strong:
The greater the pulling force, the tighter the jaws grip the object concerned!
The arms cannot bend or deflect.
Versatile:
Accessory sets are available for the 5 and 50 ton pullers.
Advantages of self-centering pullers:
Prevent damage to shaft and object being pulled.
Work efficient and save time.
Supplied in handy carrying case.

型 號 Model	工作能力 Capacity ton (kN)	橫向最大拉距 Spread (mm)	縱向最大拉距 Shaft length (mm)	揚 程 Stroke (mm)
YL-5T	5(49)	200	140	50
YL-10T	10(98)	250	160	50
YL-20T	20(196)	350	200	50
YL-30T	30(294)	400	250	50
YL-50T	50(490)	500	300	50

UA系列，液壓同步一體式拉馬
UA series, hydraulic synchronous integrated puller

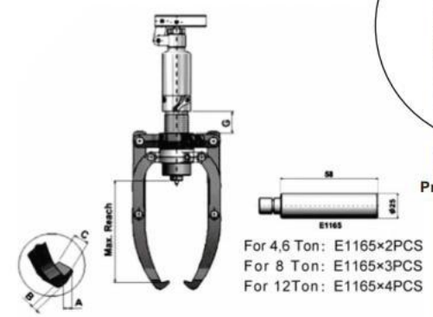

液壓同步式拉馬世界第一臺2/3爪共用，同步式拉馬
The world's first hydraulic synchronous puller, featuring shared 2nd and 3rd claws, is a synchronous puller

人性化設計:
- 單人即可藉由快速同步式爪鈎結構，將拉馬自動定位中心，并鎖固于工件上。
- 360° 可旋轉之搖座設計，可讓使用者以任何方向，操作拉馬。
- 彈性頂針設計，可準確的定位中心(可拆卸式)。
- 操作出力，有自4Ton到30Ton,可供選擇。
- 20Ton與30Ton之高出力拉馬，更具有兩段式揚升專利設計，第一段爲快速揚升，可節省心軸推杆接觸軸心的準備時間：當心軸推杆與軸心相接觸時，拉馬自動轉換爲第二階段一高壓出力，此可大幅節省搖杆作動之時間與次數，快速的將工件拆卸完成。
- 根據使用需要，使用者可利用延伸杆(標準配備),達到不同的揚程需求。

安全性:
- 拉馬之油壓主體，設有內建式安全閥，可避免拉馬之損害。
- 自動鎖固的爪鈎結構，永不鬆脫，可避免高壓使用中與卸壓後，出現爪鈎鬆脫的現象。
- 爪鈎與爪座，采用鉻錳合金鋼，鍛造而成；提供使用者最安心與耐用之選擇。

節省成本:
- 完全內建式安全閥，可確保拉馬均在額定的安全壓力範圍內操作，而延長拉馬之使用期限。
- 自動中心定位功能，可避免損傷主軸與待拆卸之工件。
- 世界第一臺之2/3爪共用，同步式拉馬設計，是最具有效率與成本效益之拉拔工具。

A single person can automatically position the puller at the center and secure it to the workpiece through the quick-sync claw hook structure.
The 360° rotatable rocking seat design allows users to operate the puller in any direction.
The elastic ejector pin design ensures accurate center positioning (detachable).
Operating force ranges from 4Ton to 30Ton, available for selection.
The high-output puller with capacities of 20Ton and 30Ton features a patented two-stage lifting design. The first stage is a rapid lifting that saves preparation time for the spindle push rod to contact the shaft center. When the spindle push rod comes into contact with the shaft center, the puller automatically transitions to the second stage, which applies high-pressure output. This significantly reduces the time and number of rocker actuations, enabling rapid disassembly of the workpiece.
According to usage needs, users can utilize the extension rod (standard equipment) to meet different lift requirements.

The hydraulic body of the puller is equipped with a built-in safety valve to prevent damage to the puller.
The claw hook structure with automatic locking ensures never to loosen, effectively preventing the claw hook from coming loose during high-pressure use or after pressure relief.
The claw hook and claw base are forged from chromium-manganese alloy steel, providing users with the most reliable and durable choice.

The fully built-in safety valve ensures that the puller operates within the rated safe pressure range, thereby extending the service life of the puller.
The automatic center positioning function can prevent damage to the spindle and the workpiece to be disassembled.
The world's first 2/3 claw shared, synchronous puller design is the most efficient and cost-effective drawing tool.

型 號 Model	工作能力 Capacity ton (kN)	拔 距 Reach (Max.mm)	開 幅 Spread (Max.mm)	揚 程 Stroke (mm)	主體端 Pump Tip (mm)			爪鈎端 Jaw Tip (mm)			重 量 Weight (kg)
				H	E	F	G	A	B	C	
UA-4	4 Ton	190	325	60	42	22	40	13	10	22	8
UA-6	6 Ton	230	380	70	45	23	50	13	10	22	9.8
UA-8	8 Ton	280	450	85	50	25	70	13	13	27.5	11.7
UA-12	12 Ton	305	485	85	60	28	70	15	16.5	29	14.8
UA-20	20 Ton	365	570	111	80	40	62	20	27	33	25.7
UA-30	30 Ton	465	680	111	98	50	85	20	27	38	36

***均送安全防護網 *All come with safety nets**

UK 系列，液壓一體式拉馬
UK-Series, Hydraulic integrated puller

Optional longer Jaw
Part No.C0948 for UK-4
Part No.C0949 for UK-6
Part No.C0950 for UK-8
Part No.C0951 for UK-12
Part No.C0960 for UK-20
Part No.C0961 for UK-30

可選配加長鉗口
UK-4 C0948
UK-6的零件編號C0949
適用于UK-8的零件編號C0950
UK-12的零件編號C0951
UK-20的零件編號C0960
UK-30的零件編號C0961

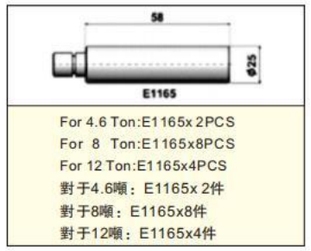

For 4.6 Ton:E1165x 2PCS
For 8 Ton:E1165x8PCS
For 12 Ton:E1165x4PCS
對于4.6噸：E1165x 2件
對于8噸：E1165x8件
對于12噸：E1165x4件

- 四段可調式搖杆設計，可讓使用者亦需要不同，自行調整力矩，而達到省力之目的。
- 360°可旋轉之搖座設計，可讓使用者以任何方向，操作拉馬。
- 彈性頂針設計，可準確的定位中心(可拆卸式)。
- 操作出力，有自4Ton到30Ton,可供選擇。
- 20Ton與30Ton之高出力拉馬，更具有兩段式揚升專利設計，第一段爲快速揚升，可節省心軸推杆接觸軸心的準備時間；當心軸推杆與軸心相接觸時，拉馬自動轉換爲第二階段–高壓出力，此可大幅節省搖杆作動之時間與次數，快速的將工作拆卸完成。
- 根據使用需要，使用者可選擇延伸杆與加長爪鈎，達到不同的揚程與拔距之需求。
- 拉馬之油壓主體，設有內建式安全閥，可避免拉馬之損害。
- 爪鈎與爪座，采用鉻錳合金鋼，鍛造而成；提供使用者最安心與耐用之選擇。
- 防鬆脫爪鈎螺絲之設計，可防止使用者因疏忽，而造成爪鈎結構鬆脫之潛在危險。
- 熱鍛造之爪鈎螺絲與磷酸錳電鍍表面處理，可確保防護與耐久使用之效益。

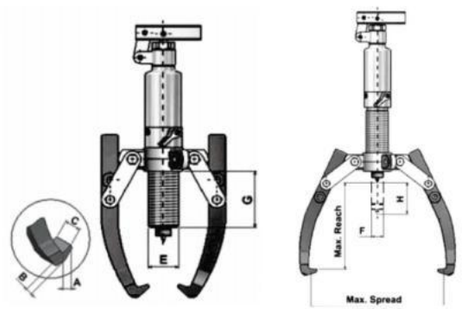

The four-segment adjustable joystick design allows users to adjust the torque according to their needs, thus achieving the goal of saving effort.
The 360° rotatable rocking seat design allows users to operate the puller in any direction.
Elastic ejector pin design, capable of accurately positioning the center (removable).
Operating force ranges from 4Ton to 30Ton, available for selection.
The high-output puller with a capacity of 20Ton or 30Ton features a patented two-stage lifting design. The first stage is a rapid lifting that saves preparation time for the spindle push rod to contact the shaft center. When the spindle push rod comes into contact with the shaft center, the puller automatically transitions to the second stage - high-pressure output, which significantly reduces the time and number of joystick actuations, enabling quick completion of work disassembly.
According to usage needs, users can choose to use extension rods and extended claw hooks to meet different requirements for lifting height and pulling distance.
The hydraulic system of the puller is equipped with a built-in safety valve to prevent damage to the puller.
The claw hook and claw base are forged from chrome-manganese alloy steel, providing users with the most reliable and durable choice.
The design of the anti-loosening claw hook screw can prevent the potential danger of the claw hook structure loosening due to user negligence.
Hot-forged claw hook screws, coupled with manganese phosphate electroplating surface treatment, ensure effective protection and durability.

型 號 Model	工作能力 Capacity ton (kN)	拔 距 Reach (Max.mm)	開 幅 Spread (Max.mm)	揚 程 Stroke (mm)	主體端 Pump Tip (mm)			爪鈎端 Jaw Tip (mm)			重 量 Weight (kg)
				H	E	F	G	A	B	C	
UK-4	4 Ton	185	225	60	42	22	84	11	6	22	4.5
UK-6	6 Ton	220	330	70	45	23	94	13	10	22	5.5
UK-8	8 Ton	230	350	85	50	25	122	11	10	25	6.5
UK-12	12 Ton	270	375	85	60	28	118	14	10	29	8.0
UK-20	20 Ton	360	520	111	80	40	160	20	27	33	22.0
UK-30	30 Ton	360	550	111	98	50	155	20	27	38	32.0

*均送安全防護網 *All come with safety nets

US 系列，液壓分體式同步拉馬
US series, hydraulic split-type synchronous puller

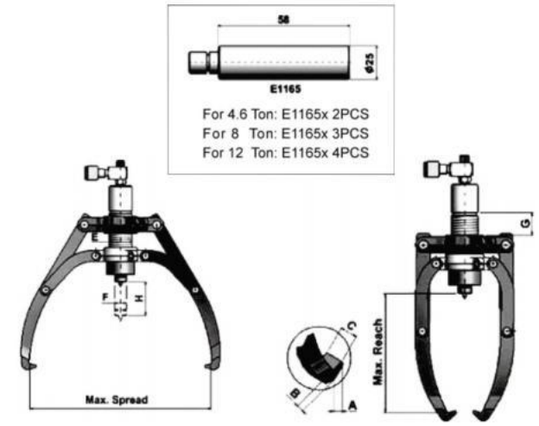

For 4.6 Ton: E1165x 2PCS
For 8 Ton: E1165x 3PCS
For 12 Ton: E1165x 4PCS

液壓同步式拉馬世界第一臺2/3爪共用，同步式拉馬

The world's first hydraulic synchronous puller, featuring shared 2nd and 3rd claws, is a synchronous puller

人性化設計：

- 單人即可藉由快速同步式爪鈎結構，將拉馬自動定位中心，并鎖固于工件上。
- 360° 可旋轉之搖座設計，可讓使用者以任何方向，操作拉馬。
- 彈性頂針設計，可準確的定位中心(可拆卸式)。
- 操作出力，有自4Ton到30Ton,可供選擇。
- 20Ton與30Ton之高出力拉馬，更具有兩段式揚升專利設計，第一段爲快速揚升，可節省心軸推杆接觸軸心的準備時間：當心軸推杆與軸心相接觸時，拉馬自動轉換爲第二階段一高壓出力，此可大幅節省搖杆作動之時間與次數，快速的將工件拆卸完成。
- 根據使用需要，使用者可利用延伸杆(標準配備),達到不同的揚程需求。

安全性：

- 拉馬之油壓主體，設有內建式安全閥，可避免拉馬之損害。
- 自動鎖固的爪鈎結構，永不鬆脫，可避免高壓使用中與卸壓後，出現爪鈎鬆脫的現象。
- 爪鈎與爪座，采用鉻錳合金鋼，鍛造而成；提供使用者最安心與耐用之選擇。

節省成本：

- 完全內建式安全閥，可確保拉馬均在額定的安全壓力範圍內操作，而延長拉馬之使用期限。
- 自動中心定位功能，可避免損傷主軸與待拆卸之工件。
- 世界第一臺之2/3爪共用，同步式拉馬設計，是最具有效率與成本效益之拉拔工具。

A single person can automatically position the puller at the center and secure it to the workpiece through the quick-sync claw hook structure.
The 360° rotatable rocking seat design allows users to operate the puller in any direction.
The elastic ejector pin design ensures accurate center positioning (detachable).
Operating force ranges from 4Ton to 30Ton, available for selection.
The high-output puller with capacities of 20Ton and 30Ton features a patented two-stage lifting design. The first stage is a rapid lifting that saves preparation time for the spindle push rod to contact the shaft center. When the spindle push rod comes into contact with the shaft center, the puller automatically transitions to the second stage, which applies high-pressure output. This significantly reduces the time and number of rocker actuations, enabling rapid disassembly of the workpiece.
According to usage needs, users can utilize the extension rod (standard equipment) to meet different lift requirements.

The hydraulic body of the puller is equipped with a built-in safety valve to prevent damage to the puller.
The claw hook structure with automatic locking ensures never to loosen, effectively preventing the claw hook from coming loose during high-pressure use or after pressure relief.
The claw hook and claw base are forged from chromium-manganese alloy steel, providing users with the most reliable and durable choice.

The fully built-in safety valve ensures that the puller operates within the rated safe pressure range, thereby extending the service life of the puller.
The automatic center positioning function can prevent damage to the spindle and the workpiece to be disassembled.
The world's first 2/3 claw shared, synchronous puller design is the most efficient and cost-effective drawing tool.

型 號 Model	工作能力 Capacity ton (kN)	拔 距 Reach (Max.mm)	開 幅 Spread (Max.mm)	揚 程 Stroke (mm)	主體端 Pump Tip (mm)			爪鈎端 Jaw Tip (mm)			重 量 Weight (kg)
				H	E	F	G	A	B	C	
US-4	4 Ton	190	325	60	42	22	40	13	10	22	5.6
US-8	8 Ton	280	450	85	50	25	70	13	13	27.5	9.0
US-12	12 Ton	305	485	85	60	28	70	15	16.5	29	11.7
US-20	20 Ton	365	570	111	80	40	62	20	27	33	24.0
US-30	30 Ton	465	680	111	98	50	85	20	27	38	34.0

*均送安全防護網 *All come with safety nets

UR 系列，液壓分體式拉馬
UR series, hydraulic split puller

Optional longer Jaw
Part No.C0948 for UR-4
Part No.C0949 for UR-6
Part No.C0950 for UR-8
Part No.C0951 for UR-12
Part No.C0960 for UR-20
Part No.C0961 for UR-30
可選配加長鉗口
UR-4 C0948
UR-6的零件編號C0949
適用于UR-8的零件編號C0950
UR-12的零件編號C0951
UR-20的零件編號C0960
UR-30的零件編號C0961

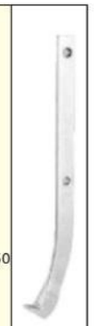

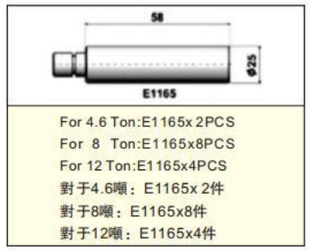

For 4.6 Ton:E1165x 2PCS
For 8 Ton:E1165x8PCS
For 12 Ton:E1165x4PCS
對于4.6噸：E1165x 2件
對于8噸：E1165x8件
對于12噸：E1165x4件

- 四段可調式搖杆設計，可讓使用者亦需要不同，自行調整力矩，而達到省力之目的。
- 360°可旋轉之搖座設計，可讓使用者以任何方向，操作拉馬。
- 彈性頂針設計，可準確的定位中心(可拆卸式)。
- 操作出力，有自4Ton到30Ton,可供選擇。
- 20Ton與30Ton之高出力拉馬，更具有兩段式揚升專利設計，第一段爲快速揚升，可節省心軸推杆接觸軸心的準備時間；當心軸推杆與軸心相接觸時，拉馬自動轉換爲第二階段–高壓出力，此可大幅節省搖杆作動之時間與次數，快速的將工作拆卸完成。
- 根據使用需要，使用者可選擇延伸杆與加長爪鈎，達到不同的揚程與拔距之需求。
- 拉馬之油壓主體，設有內建式安全閥，可避免拉馬之損害。
- 爪鈎與爪座，采用鉻錳合金鋼，鍛造而成；提供使用者最安心與耐用之選擇。
- 防鬆脫爪鈎螺絲之設計，可防止使用者因疏忽，而造成爪鈎結構鬆脫之潛在危險。
- 熱鍛造之爪鈎螺絲與磷酸錳電鍍表面處理，可確保防護與耐久使用之效益。

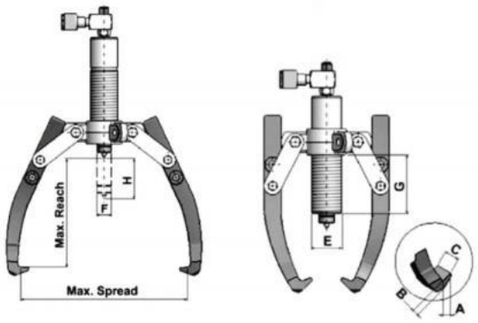

The four-segment adjustable joystick design allows users to adjust the torque according to their needs, thus achieving the goal of saving effort.
The 360° rotatable rocking seat design allows users to operate the puller in any direction.
Elastic ejector pin design, capable of accurately positioning the center (removable).
Operating force ranges from 4Ton to 30Ton, available for selection.
The high-output puller with a capacity of 20Ton or 30Ton features a patented two-stage lifting design. The first stage is a rapid lifting that saves preparation time for the spindle push rod to contact the shaft center. When the spindle push rod comes into contact with the shaft center, the puller automatically transitions to the second stage - high-pressure output, which significantly reduces the time and number of joystick actuations, enabling quick completion of work disassembly.
According to usage needs, users can choose to use extension rods and extended claw hooks to meet different requirements for lifting height and pulling distance.
The hydraulic system of the puller is equipped with a built-in safety valve to prevent damage to the puller.
The claw hook and claw base are forged from chrome-manganese alloy steel, providing users with the most reliable and durable choice.
The design of the anti-loosening claw hook screw can prevent the potential danger of the claw hook structure loosening due to user negligence.
Hot-forged claw hook screws, coupled with manganese phosphate electroplating surface treatment, ensure effective protection and durability.

型 號 Model	工作能力 Capacity ton (kN)	拔 距 Reach (Max.mm)	開 幅 Spread (Max.mm)	揚 程 Stroke (mm) H	主體端 Pump Tip (mm) E	F	G	爪鈎端 Jaw Tip (mm) A	B	C	重 量 Weight (kg)
UR-4	4 Ton	185	225	60	42	22	84	11	6	22	9.5
UR-8	8 Ton	230	350	85	50	25	122	11	10	25	11.5
UR-12	12 Ton	270	375	85	60	28	118	14	10	29	14.0
UR-20	20 Ton	360	520	111	80	40	160	20	27	33	20.0
UR-30	30 Ton	360	550	111	98	50	155	20	27	38	30.0

*均送安全防護網 *All come with safety nets

UKM 系列，液壓拉馬套裝組
UKM series, hydraulic puller set

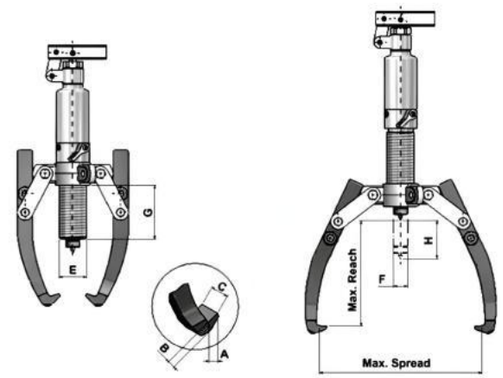

- 四段可調式搖杆設計，可讓使用者依需要不同，自行調整力距，而達到省力之目
- 的。
- 360°可旋轉之搖座設計，可讓使用者以任何方向，操作拉馬。
  彈性頂針設計，可準確的定位中心(可拆卸式)。操作出力，有自4 Ton到12 Ton,可供選擇。
- 拉馬之油壓主體，設有內建式安全閥，可避免拉馬之損害。
- 爪鈎與爪座，采用鉻錳合金鋼，鍛造而成；提供使用者最安心與耐用之選擇。
- 壓盤式套裝，更適用于拆卸培林，可提供更便利與安全之效益。
- 熱鍛造之爪鈎螺絲與磷酸錳電鍍表面處理，可確保防護與耐久使用之效益。

The four-segment adjustable joystick design allows users to adjust the force and torque according to their needs, thus achieving the goal of saving effort.
The 360° rotatable rocking seat design allows users to operate the puller in any direction.
The elastic ejector pin design ensures accurate center positioning (detachable).
The operating force ranges from 4 Ton to 12 Ton, with options available.
The hydraulic system of the puller is equipped with a built-in safety valve to prevent damage to the puller.
The claw hook and claw base are forged from chrome-manganese alloy steel, providing users with the most reliable and durable choice.
The pressure plate type set is more suitable for dismantling bearings, providing greater convenience and safety benefits.
The hot-forged claw hook screws, coupled with a manganese phosphate electroplating surface treatment, ensure both protection and durability for long-term use.

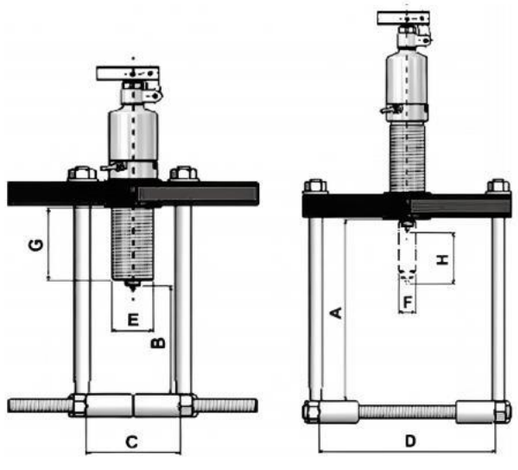

型 號 Model	工作能力 Capacity ton (kN)	拔 距 Reach (Max.mm)	開 幅 Spread (Max.mm) C	D	揚 程 Stroke (mm) H	主體端 Pump Tip (mm) E	F	G	爪鈎端 Jaw Tip (mm) A	B	C	重 量 Weight (kg)
UKM-4	4 Ton	185/250	55	255/110	60	42	22	84	13	6	22	4.5/8.5
UKM-6	6 Ton	220/270	95	330/180	70	45	23	94	13	10	22	5.5/11.5
UKM-8	8 Ton	230/270	95	350/220	85	50	25	122	11	10	25	6.5/12.6
UKM-12	12 Ton	230/270	225	375/290	85	60	28	118	14	10	29	8.0/18.0

*均送安全防護網 *All come with safety nets

UPM 系列一體壓盤式拉馬/壓盤配件

UPM series integrated pressure plate type puller
Pressure plate accessories

UPM-810

YC -培林壓盤系列

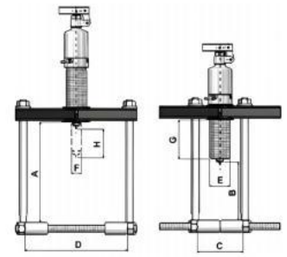

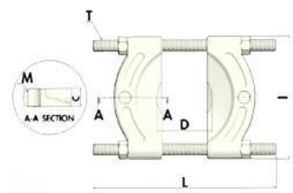

- 四段可調式搖杆設計，可讓使用者亦需要不同，自行調整力矩，而達到省力之目的。
- 360°可旋轉之搖座設計，可讓使用者以任何方向，操作拉馬。
- 彈性頂針設計，可準確的定位中心(可拆卸式)。
- 操作出力，有自4Ton到12Ton,可供選擇。
- 拉馬之油壓主體，設有內建式安全閥，可避免拉馬之損害。
- 爪鈎與爪座，采用鉻錳合金鋼，鍛造而成；提供使用者最安心與耐用之選擇。
- 壓盤式套裝，更適用于拆卸培林，可提供更便利與安全之效益。
- 熱鍛造之爪鈎螺絲與磷酸錳電鍍表面處理，可確保防護與耐久使用之效益。

The four-segment adjustable joystick design allows users to adjust the force and torque according to their needs, thus achieving the goal of saving effort.
The 360° rotatable rocking seat design allows users to operate the puller in any direction.
The elastic ejector pin design ensures accurate center positioning (detachable). The operating force ranges from 4 Ton to 12 Ton, with options available.
The hydraulic system of the puller is equipped with a built-in safety valve to prevent damage to the puller.
The claw hook and claw base are forged from chrome-manganese alloy steel, providing users with the most reliable and durable choice.
The pressure plate type set is more suitable for dismantling bearings, providing greater convenience and safety benefits.
The hot-forged claw hook screws, coupled with a manganese phosphate electroplating surface treatment, ensure both protection and durability for long-term use.

TECHNICAL DATA-CROSS BEARING PULLERS 全套

型 號 Model	工作能力 Capacity ton (kN)	拔 距 Reach (Max.mm)	開 幅 Spread (Max.mm)	揚 程 Stroke (mm)	主体端 Pump Tip (mm)			重 量 Weight (kg)
				H	E	F	G	
UPM-410	4 Ton	250	110	60	42	22	84	8.5
UPM-610	6 Ton	270	180	70	45	23	92	10.5
UPM-810	8 Ton	270	220	85	50	25	122	12.5
UPM-1210	12 Ton	381	290	85	60	28	118	18.0

TECHNICAL DATA-BEARING ATTACHMENTS 培林壓盤

型 號 Model	Dmin-Max (mm)	L (mm)	l (mm)	ØT (inch)	ØM (inch)	重 量 Weight (kg)
YC-9005	5-60	125	92	3/8-24UNF	3/8-16UNC	0.6
YC-9010	15-60	135	130	1/2-20UNF	3/8-16UNC	1.4
YC-9015	12-70	163	156	5/8-18UNF	1/2-12UNC	2.5
YC-9025	28-150	260	207	3/4-16UNF	5/8-11UNC	5.5
YC-9035	20-200	350	240	1-14UNF	3/4-10UNC	8.5
YC-9035A	20-200	360	240	7/8-14UNF	1-14UNC	11.0

TECHNICAL DATA-ACCESSORY SET 壓盤配件組(不含油泵)

型 號 Model	工作能力 Capacity ton (kN)	拔 距 Reach (Max.mm)	開 幅 Spread (Max.mm)		適用之液壓主體 Optional Pump Body	總寬度 Overall Depth (W/mm)	重 量 Weight (kg)
			C	D			
P-412	4 Ton	250	55	110	PM-401	165	6.5
P-612	6 Ton	270	95	180	PM-601	260	8.5
P-812	8 Ton	270	95	220	PM-801	260	9.5
P-1212	12 Ton	380	225	290	PM-1201	360	13.0

ET 系列，智慧型三角壓盤

ET series，Intelligent triangular pressure plate

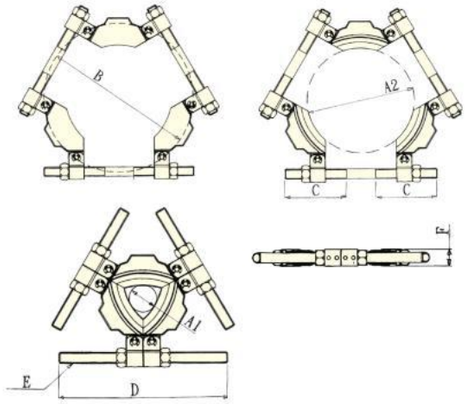

簡單，方便兼具安全的拆卸工具配件：

- 在目前市場中，此專利獨特的活動式螺杆，特別爲 合三爪式拉拔器而設計之配件，其提供平衡的三等分分布，并由壓盤與培林內圈完全接觸，在拆卸過程中，將其他部件的損壞降至最低。三重不同尺寸的智慧型三角壓盤，可適用于最大的心軸軸徑，由50至495 mm(2至19.5)。

人性化設計：

- 獨特專利設計之活動式螺杆，可提供可適用開幅的最大絕對值。
- 三片式的設計，可提供最均衡的出力分配，避免培林于拆卸過程中，傾斜且或是阻滯于心軸上。
- 三片式設計，可適用於任何形式的三爪式拉拔器。
- 其開幅範圍，可涵蓋絕大多數尺寸的心軸規格。

安全性：

- 此獨特的設計，將與工件的接觸面，平均的分布於培林內圈，因而相交于傳統兩塊式壓盤。
- 其可節省出力的需求，進而達到更高的安全標準。
- 由于出力平均分布于培林內圈，在拆卸過程中，可將其他部件的損害降至最低。
- 各主要部件，采用鉻錳合金鋼，鍛造而成；提供使用者最安心與耐用之選擇。

節省成本：

- 智慧型活動螺杆式的設計，使同樣尺寸的壓盤，
- 達到更大開幅的需求，可大幅節省人力。
- 重置工具與操作的時間。
- 世界第一臺智慧型的三角壓盤，是最具效率與成本效益之拆卸工具的配件。

Simple, convenient, and safe disassembly tool accessories

In the current market, this patent's unique movable screw rod, specifically designed as an accessory for the three-claw puller, provides a balanced tripartite distribution and is fully contacted by the pressure plate and the inner ring of the bearing, minimizing damage to other components during the disassembly process. The three intelligent triangular pressure plates of different sizes can be applied to the largest spindle diameters, ranging from 50 to 495 mm (2 to 19.5).

User-friendly design:

The uniquely patented design of the movable screw rod can provide the maximum absolute value of the applicable opening range.
The three-piece design ensures the most balanced distribution of force, preventing the bearing from tilting or getting stuck on the spindle during disassembly.
Three-piece design, suitable for any form of three-jaw puller.
Its opening range can cover the vast majority of spindle specifications in various sizes.

Safety:

This unique design evenly distributes the contact surface with the workpiece across the inner ring of the bearing,
Therefore, it intersects with the traditional two-piece pressure plate.
It can reduce the demand for effort, thereby achieving higher safety standards.
Due to the even distribution of force within the inner ring of the bearing, damage to other components can be minimized during disassembly. The main components are forged from chromium-manganese alloy steel, providing users with the most reliable and durable option.

Save costs:

The intelligent active screw design allows for a pressure plate of the same size,
To meet the demand for wider opening, significant labor savings can be achieved.
Reset the time of the tool and operation.
The world's first intelligent triangular pressure plate is the most efficient and cost-effective accessory for disassembly tools.

型 號 Model	適用主軸軸徑 Capacity (mm)	最大開幅 Maximum opening width (mm)	可用軸直徑 Available Shaft Dia (mm)		開 幅 Spread Max(mm)	C	D	E	F	重 量 Weight (mm)
			A1	A2	B					
ET3-210	50-210	280	50	210	280	115	285	Ø3/1"-16UNF	31	5.5
ET3-340	90-340	460	90	340	460	170	430	Ø1"14UN	45	16.5
ET3-495	140-495	660	140	195	660	240	600	/	61	41.0

UAM 系列，機械同步式拉馬
UAM series, Mechanical synchronous puller

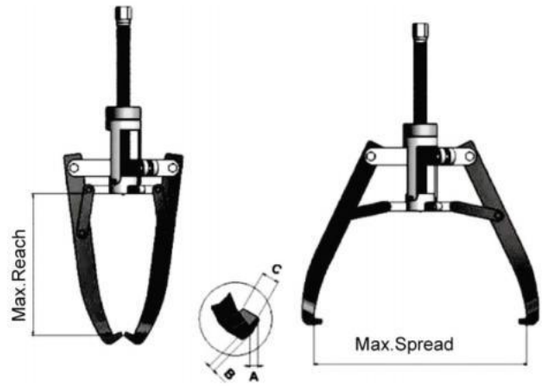

機械同步式拉拔器　世界第一臺2/3爪共用，同步式拉馬

Mechanical synchronous puller:
The world's first 2/3 claw shared, synchronous puller

簡單，方便兼備安全的拉拔工具：

- 在目前的市場中，此專利獨特的，快速同步移動之爪鈎設計，絕對能提供最人性化與最安全的拉拔功能。此最簡單且具效率之快速同步移動式爪鈎設計，讓使用者在操作中，單人即可快速并準確的將拉馬定位于工件之中心上。

人性化設計：

- 單人即可藉由快速同步式爪鈎結構，將拉馬自動定位中心，并鎖固于工件上。
- 操作出力，有自2Ton到10Ton,可供選擇。
- 根據使用環境之需要，使用者可選用3爪，2爪或2/3爪，以利操作。

安全性：

- 自動鎖固的爪鈎結構，永不鬆脫，可避免高出力使用中與拆卸後，出現爪鈎鬆脫的現象。
- 爪鈎與爪座，采用鉻錳合金鋼，鍛造并經熱處理而成；提供使用者最安心與耐用之選擇。
- 主螺杆與爪鈎螺絲，采用高碳鋼材質；同時爪鈎螺絲，具有防鬆脫設計，不會出現脫落之情況。

節省成本：

- 自動中心定位功能，可避免損傷主軸與待拆卸之工件。
- 世界第一臺2/3爪共用，同步式拉拔器之專利設計，是最具效率與成本之效益拉拔工具。

A simple, convenient, and safe pulling tool

In the current market, this patent's unique, fast-sync moving claw hook design can definitely provide the most user-friendly and safest pulling function. This simplest and most efficient fast-sync moving claw hook design allows users to quickly and accurately position the puller at the center of the workpiece during operation, even with just one person.

User-friendly design:

A single person can automatically position the puller at the center and secure it to the workpiece through the quick-sync claw hook structure.
Operating force ranges from 2Ton to 10Ton, available for selection.
According to the needs of the usage environment, users can choose between 3 claws, 2 claws, or 2/3 claws for ease of operation.

Safety:

The claw hook structure with automatic locking ensures that it will never loosen, thus avoiding the phenomenon of claw hook loosening during high-force use or after disassembly.
The claw hook and claw base are made of chrome-manganese alloy steel, forged and heat-treated, providing users with the most reliable and durable choice.
The main screw and claw hook screw are made of high-carbon steel; meanwhile, the claw hook screw features an anti-loose design, ensuring no loosening or falling off.

Save costs:

The automatic center positioning function can prevent damage to the spindle and the workpiece to be disassembled.
The world's first patented design for a synchronized puller with shared 2/3 claws is the most efficient and cost-effective pulling tool.

型　號 Model	工作能力 Capacity ton (kN)	拔 距 Reach (Max.mm)	開 幅 Spread (Max.mm)	軸直径 Shaft Dia. (mm)	爪鈎端 Jaw Tip (mm)			重 量 Weight (kg)
				E	A	B	C	
UAM-2-120	2 Ton	80	120	Ø5/8"×11T	8	6	15	1.6
UAM-3-180	3 Ton	120	180	Ø5/8"×11T	6	7	15	2.3
UAM-5-270	5 Ton	160	270	Ø3/4"×10T	11	10	25	4.3
UAM-8-300	8 Ton	210	300	Ø3/4"×10T	13	14	27	6.1
UAM-10-380	10 Ton	250	380	Ø7/8"×14T	14	10	29	9.6

PHB 系列，液壓自鎖自對中拉馬
PHB series, Hydraulic self-locking and self-centering puller

POSI LOCK™美國

工作能力: Capacity:	**10-50ton**
伸距: Reach:	**205-355mm**
張距: Spread:	**19-635mm**
最大工作壓力: Maximum Operating Pressure:	**700 bar**

- 獨有的安全籠Cage®專利設計，能牢固鎖定工件，防止打滑。
- 自動對中，防止偏載，保證絲杆始終處于受力中心，延長使用壽命。
- 通過T型手柄和安全籠Cage®迅速控制拉馬，操作更方便。
- 特殊形狀鍛造鉗爪更利于在狹小空間工作。
- 絲杆直接插入油缸柱塞内孔，安裝簡單，結實耐用。
- 强勁的液壓系統能輕易拆卸大型工件。

The unique patented design of the safety cage Cage® can firmly lock the workpiece to prevent slipping.
It automatically aligns to prevent eccentric loading, ensuring that the screw rod is always at the center of force, thereby extending its service life.
The puller can be quickly controlled through the T-shaped handle and the safety cage Cage®, making operation more convenient.
Forged pliers with special shapes are more conducive to working in confined spaces.
The screw rod is directly inserted into the inner hole of the cylinder plunger, ensuring simple installation, robustness, and durability.
A robust hydraulic system can easily disassemble large workpieces.

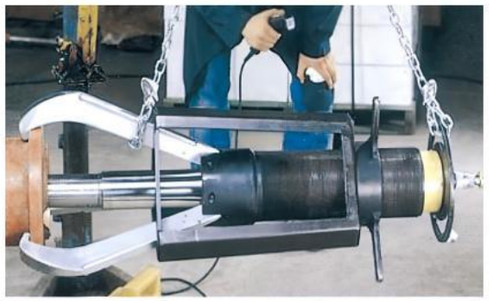

型　號 Model	爪 數 Claw count	工作能力 Capacity ton (kN)	開 幅 Spread (Max.mm)	揚 程 Stroke (mm)	油缸型號 Cylinder model	重 量 Weight (kg)
PHB-108	3	10	19-304	203	RC-106	16
PHB-110	3	15	25-381	245	RC-1510	30
PHB-113	3	25	63-457	304	RC-2514	62
PHB-116	3	50	76-635	355	RC-5013	108

***以上型號需配合電動泵使用　*The above models need to be used in conjunction with an electric pump**

PH 系列，50噸車載液壓拉馬
PH series, 50 ton vehicle mounted hydraulic puller

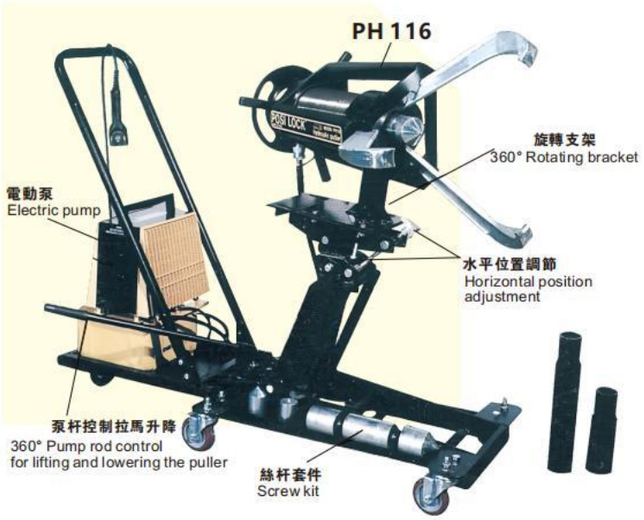

POSI LOCK™美國

工作能力: Capacity:	100ton
伸距: Reach:	304-1219mm
張距: Spread:	79-1778mm
最大工作壓力: Maximum Operating Pressure:	700 bar

PH-100T

長(L)：1955mm

寬(W)：1040mm

高(H)：1980mm

50噸車載液壓拉馬
50 ton vehicle mounted hydraulic puller

液壓升降車最大提升高度1690mm
Maximum lifting height of the hydraulic lift truck is 1690mm

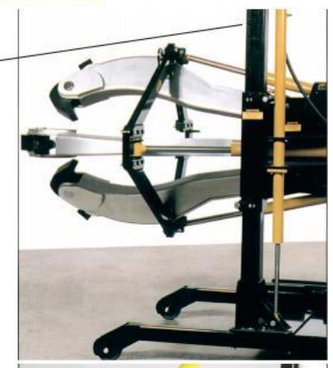

- 100噸拉馬帶可調式鉗爪嘴和液壓驅動的安全籠Cage®設計，能牢固鎖定工件，防止打滑。
- 自動對中，防止偏載，保證絲杆始終處于受力中心，延長使用壽命。
- 帶液壓升降的滾輪車，也可卸下單獨使用。
- 液壓驅動的安全籠Cage®調節張距。
- 大功率雙級電動泵，帶綫控3m開關。
- 拉馬高度範圍：480mm–1690mm。
- 100噸拉馬含089x37,Ø89x483,Ø89x229絲杆延長各一根。

The 100-ton puller belt, equipped with adjustable pincer jaws and the hydraulic-driven Cage® design, can firmly lock the workpiece to prevent slipping.
It automatically aligns to prevent eccentric loading, ensuring that the screw rod is always at the center of force, thereby extending its service life.
The roller cart with hydraulic lifting can also be detached and used independently.
The hydraulic-driven safety cage Cage® adjusts the tension.
High-power dual-stage electric pump with a 3m wired switch.
Puller height range: 480mm-1690mm. The 100-ton puller includes one each of 089x37, Ø89x483, and Ø89x229 screw rod extensions.

型 號 Model	爪 數 Claw count	工作能力 Capacity ton (kN)	開 幅 Spread (Max.mm)	揚 程 Stroke (mm)	高度范圍 Height range	重 量 Weight (kg)
PH-123T	3/2	100	191-1778	1219	673-1690	908
PH-100T	3	100	191-1778	1219	673-1690	855
PH-102T	3	100	191-1778	1219	673-1690	772
PH-116E/3050	3	50	76-635	304	480-1420	178
PHB-113E/3050	3	25	63-457	355	480-1420	135

***PHB系列車載液壓拉馬也可根據現場要求選配手動泵，該系列車載升降系統通用。**
*PHB series vehicle-mounted hydraulic puller can also be equipped with a manual pump according to on-site requirements, and this series of vehicle-mounted lifting systems are universally applicable.

UAH–500CE，50噸同步車載式拉馬
UAH-500CE, 50-ton synchronous vehicle-mounted puller

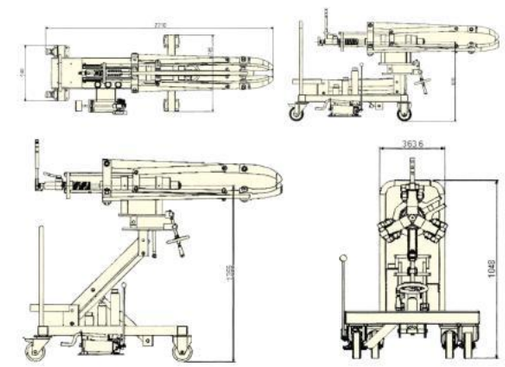

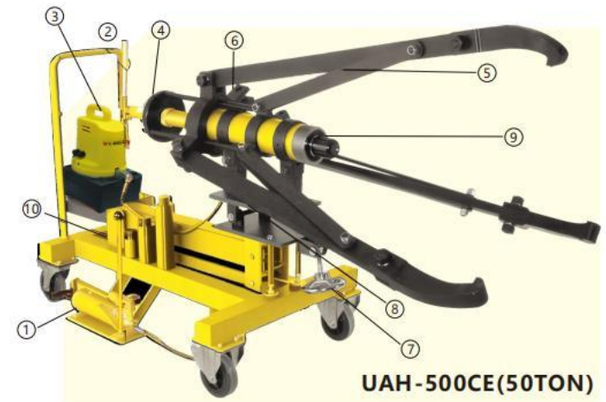

- 1.脚踏式泵浦，可精確地操作拉馬之升降。
- 2.同步式爪鈎結構，采雙動一體式泵浦操作；以提供安全，準確及油壓緊固的壓力，抓住工件。
- 3.主體油缸之揚伸與回復，采獨立電動液壓泵浦操控，可防止使用者操作錯誤，而產生危險。特別搭配電動液壓泵，以彰顯此拉馬之優越性能。
- 4.自動中心校正功能，可確保主體油缸對準中心上且爪鈎系統均等地抓住待拆卸之工件。
- 5.同步式爪鈎結構，可確保爪鈎不鬆脫或是被工件被拆卸的瞬間，所產生之反作用力彈開。
- 6.2爪與3爪，可互換式使用之爪鈎結構。
- 7.獨特之角度調整設計，可調整拉馬中心綫之仰角與俯角，各五度；方便使用者作精確的中心綫定位。
- 8.一車兩後輪，采用360° 旋轉之設計，以利使用輕便地操控。
- 9.油缸主體采用兩段式揚伸之專利設計；第一段爲低壓快速揚伸，可節省心軸揚升之時間，第二段。
- 10.當心軸與工件之軸心相接觸後，自動轉換爲高壓出力，以提供拆卸所需之額定出力。
- 11.三種不同長度之延伸杆，爲標準配備；可供使用者依工作需求，自行搭配使用。

1.The foot-operated pump can precisely control the lifting and lowering of the puller.
2.Synchronous claw hook structure, utilizing dual-action integrated pumping operation; providing safe, accurate, and oil-pressure tightening pressure to grasp the workpiece.
3.The extension and retraction of the main cylinder are controlled by an independent electric hydraulic pump, which prevents dangerous operational errors by users. The special combination with an electric hydraulic pump highlights the superior performance of this puller.
4.The automatic center correction function ensures that the main cylinder is aligned at the center and the claw hook system evenly grips the workpiece to be disassembled.
5.The synchronous claw hook structure ensures that the claw hook does not loosen or get ejected by the reaction force generated at the moment of disassembly of the workpiece.
6.Interchangeable claw hook structure with 2 claws and 3 claws.
7.Unique angle adjustment design allows for the adjustment of the elevation and depression angles of the puller's centerline, each by five degrees; facilitating precise centerline positioning for users.
8.The vehicle has two rear wheels and adopts a 360° rotating design, facilitating easy and convenient maneuvering.
9.The main body of the oil cylinder adopts a patented two-stage extension design; the first stage is a low-pressure rapid extension, which can save time for spindle lifting, and the second stage.
10.When the spindle comes into contact with the axis of the workpiece, it automatically switches to high-pressure output to provide the rated output required for disassembly.
11.Three extension rods of different lengths are standard equipment; users can choose to use them according to their work requirements.

US–50液壓同步分離式拉馬
US-50 hydraulic synchronous split puller

型 號 Model	A (mm)	B (mm)	數 量 QTY
E-1309	/	75	1
E-1310	69.5	150	1
E-1311	/	250	1

*每一規格延長杆，隨附之數量
Quantity of extension rods included for each specification

爪鈎鈎部尺寸：
Hook size of claw hook:

A.鈎深(Hook depth)：1955mm

B.鈎厚(Hook thickness)：1040mm

C.鈎寬(Hook width)：1980mm

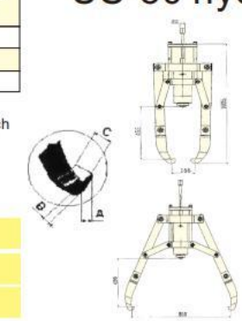

型 號 Model	拔 距 Reach Range (mm)	開 幅 Spread Range (mm)	揚 程 Stroke (mm)	總長度 Overall Length (mm)	動力源 Power Source	重 量 Weight (kg)
US-50	455	155-860	159	1035	-	140
UAH500CE	665-720	75-1250	330	2050	220,50HZ	275

14MP50,車載式液壓拉馬
14MP50, Power Pump Movable Hydraulic Gear Puller

- 用于拆卸傳動部件，例如：軸承、襯套、齒輪等。
- 拉馬由于具有25mm水平調節，5°垂直調節，可很好地準確對中。
- 50噸液壓缸采用雙作用形式，縮短回程時間，提高工作效率。
- 通過手動閥調節軸向中心高度。
- 電磁閥控制拉馬爪開合，減短調節時間，安全準確地固定在工件上。
- 防滑設計，避免拉馬爪從工件上滑開或跳開。
- 小車有兩個萬向輪，可自鎖。
- 采用3個總長度475MM加長軸過度于拉馬與工件的間隔。

Double-acting hydraulic design.
Use for dismantling large shafts and perforating work pieces.
Fully automatic hydraulic design--automatically up anddown , grip and pull.
Roller cart to change workplace.
Available in 2 and 3 jaw design allows adding a pulling disc to pull bearings.
Easy operation, high efficiency.

型 號 Model	規 格 Size	行 程 Stroke (mm)	最大張距 Min.Spread (mm)	最小張距 Min.Spread (mm)	主油缸 Cylinder	調節高度 Adjust H.
14MP50	50T	315	Ø1250	Ø170	手動閥控制 Manual valve control	手動閥調節 Manual valve adjustment

調節自對中 Adjust Automate center	三個聯結杆 Extension (mm)	最小高度(從中心綫) Min Height (mm)	最小高度(從中心綫) Max.H. (mm)	壓力表顯示 Pressure (mm)	重 量 Weight (kg)
電磁閥調節 Manual valve adjustment	75 / 150 / 250	810	1290	50T-700bar	680

14AMP系列,電動小車液壓拉馬
14AMP Series, Power Pump Movable Hydraulic Gear Puller

- 雙作用液壓設計，用于大型軸類，孔類工件的拆卸。
- 手動換向控制小車升降、夾緊工件及拉拔裝置。
- 輪式小車方便移動可隨時更換場地。

Double-acting hydraulic design, used for dismantling large shaft-type and hole-type workpieces.
The manual reversing control system is used to lift and lower the trolley, clamp the workpiece, and pull the device.
The wheeled trolley is easy to move and can be used in different locations at any time.

型 號 Model	規 格 Size	行 程 Stroke (mm)	拆卸範圍 Spread (mm)	最小開口時拉拔深度 Pulling Depth of Minmum Open (mm)	最大開口時拉拔深度 Depth of Maximum Open (mm)	重 量 Weight (kg)
14AMP100	100T	200	200-1000	450	375	720
14AMP200	200T	250	300-1500	680	550	1300
14AMP300	300T	300	400-1800	980	750	1820
14AMP500	500T	350	500-2000	1050	920	2100
14AMP630	630T	350	500-2000	1250	1000	2500

LA系列,, 車載式液壓拉馬
LA Series, Automatic Vehicle Hydraulic Puller

- 雙作用液壓設計，用于大型軸類、孔類工件拆卸的液壓工具。
- 全自動液壓設計一自動液壓升降、自動夾緊工件、自動拉拔。
- 輪式小車方便移動，可隨時更換工作場地。

Double-acting hydraulic design. Use for dismantling large shafts and perforating work pieces.
Fully automatic hydraulic design--automatically up and down, grip and pull. Roller cart to change workplace.
Available in 2 and 3 jaw design allows adding a pulling disc to pull bearings. Easy operation, high efficiency.

型 號 Model	規 格 Size	最小開口 Min Open (mm)	最小開口時拉拔深度 Pulling Depth of Min.Open (mm)	最大開口 Maximum Open (mm)	最大開口時拉拔深度 Depth of Maximum.Open (mm)	拉馬中心高度調節 Regulation of Puller Center Height (mm)	油缸行程 Cylinder Stroke (mm)	动力源三相 Source of Power	全 长 Overall Length (mm)	重 量 Weight (kg)
LA50337	50T	100	381	1220	178	450-1120	337	380V	2286	620
LA50L337	50T	64	651	1150	559	450-1120	337	380V	2590	660
LA100330	100T	120	580	1400	425	500-1250	320	380V	2300	680
LA200320	200T	285	680	1500	520	720-1500	320	380V	2500	1040

- 雙作用液壓設計，用于大型軸類，孔類工作的拆卸。
- 2爪設計的拔輪結構，簡潔、方便操作。
- 附帶安全鎖緊裝置。
- 輪式小車方便移動可隨時更換場地。

Double-acting hydraulic design, used for dismantling large shafts and holes.
The 2-claw design of the pull wheel structure is simple and easy to operate.
Equipped with a safety locking device.
The wheeled trolley is easy to move and can be used in different locations at any time.

60T-100T

150T-200T

型 號 Model	規 格 Size	最小開口 Min Open (mm)	最小開口時拉拔深度 Pulling Depth of Minmum Open (mm)	最大開口 Maximum.Open (mm)	重 量 Weight (kg)
LA25100	100T	381	1066	1219	520
LA2560	60T	140	790	1000	700
LA25200	200T	450	1200	1450	1020

最大開口時拉拔深度 Depth of Maximum Open	拉馬中心高度調節 Regulation Puller Center Height (mm)	油缸行程 Cylinder Stroke (mm)	動力源三相 Source of Power	重 量 Weight (kg)
863	305-915	250	380V	3015
650	305-915	250	380V	2885
995	450-1050	280	380V	3500

14CMP系列，專用車載液壓拉馬(拔輪器)
14CMP Series, Special Hydraulic Cart Puller

- 適用于火力電廠磨煤機、汽輪機凸輪、引風機、電機的聯軸器、軸承、齒輪等拆卸工作。
- 獨特的雙速泵配置，低壓時操縱油缸進行拔輪盤定位，高壓時操縱油
- 缸在不張開拉爪時頂升或回退工作，安全可靠。
- 采用高强度合金剛制造，大噸位油缸，出力大。
- 車載式設計，方便移動。

It is suitable for dismantling work on coal mills, turbine cams, induced draft fans, motor couplings, bearings, gears, etc. in thermal power plants.
The unique dual-speed pump configuration allows the cylinder to be operated for positioning the wheel disc at low pressure, and for lifting or retracting the workpiece without opening the claws at high pressure, ensuring safety and reliability.
Made of high-strength alloy steel, with a large-tonnage cylinder, it delivers high output.
Vehicle-mounted design, easy to move.

型 號 Model	設定拉力 Reach Range (mm)	有效行程 Spread Range (mm)	最小開口 Stroke (mm)	最大開口 Overall Length (mm)	工作壓力 Power Source	重 量 Weight (kg)
14CMP80	80	280	130	370	70	550
14CMP100	100	350	170	420	70	780
14CMP150	150	400	210	450	70	1080
14CMP200	200	500	450	650	70	1250

PH113 PH116,50噸車載液壓拉馬
PH113 PH116, 50 Ton Vehicle Mounted Hydraulic Puller

- 50噸拉馬帶可調式鉗爪嘴和液壓驅動安全籠Cage設計，能牢固鎖定工件，防止打滑。自動對中防止偏載，保證絲杆始終處于受力中心延長使用壽命。帶液壓驅動的安全籠Cage調節張距。大功率雙級電動泵，帶綫控3m開關。拉馬高度範圍：480mm–1420mm。

The 50 ton puller with adjustable claw mouth and hydraulic driven safety cage Cage design can firmly lock the workpiece and prevent slipping. Automatic centering to prevent eccentric load, ensuring that the screw is always at the center of force and extending its service life. The safety cage Cage with hydraulic drive adjusts the tension distance. High power dual stage electric pump with wire controlled 3m switch. Lamar height range: 480mm-1420mm.

型 號 Model	噸 位 (Tons)	開 幅 Spread (mm)	伸 距 Reach (mm)	高度范圍 Height Range (mm)	重 量 Weight (kg)
PH113	25	63-457	304	480-1420	138
PH116	50	76-635	355	480-1420	138

100噸車載式液壓拉馬
100 Ton Vehicle Mounted Hydraulic Puller

- 100噸拉馬帶可調式鉗爪嘴和液壓驅動安全籠Cage設計，能牢固鎖定工件，防止打滑。自動對中防止偏載，保證絲杆始終處于受力中心延長使用壽命。帶液壓驅動的安全籠Cage調節張距。大功率雙級電動泵，帶綫控3m開關。

100Ton Puller with adjust raising puller leg & safey cage drive opening closing jaw automatically to avoid jaw sliping from article
Three jaws more simultaneously fast center pointed.
10,000 PSI electric two-stage pump
Remote jog switch with 10-foot cord(3.05m)
200-ton cylinder,10,000 PSI and double acting 13.25(337mm)stroke
Hydraulic-actuated lift cart extends puller from ground to a height of5 feet(1.25m)
Jaws are hydraulically controlled with cylinders
Multiple pushing adapters
(1)4-in.diameter×9-in.(102×229mm)
(2)4-in.diameter×19-in.(102×483mm)
(3)4-in.diameter×29-in.(102×737mm)
(4)4-in.diameter×39-in.(102×990mm)

型 號 Model	爪 數 Claw count	噸 位 (tons)	開 幅 Spread (mm)	行 程 Stroke (mm)	升降高度 Raising H. (mm)	重 量 Weight (kg)
PH-123T	3/2	100	191-1778	304-1219	673-1690	908
PH-100T	3	100	191-1778	304-1219	673-1690	855
PH-102T	2	100	191-1778	304-1219	673-1690	772
PH-200T	4	200	165-1778	304-1219	673-1690	1882

IBT系列，驅動液壓扭矩扳手
IBT Series, Drive Hydraulic Torque Wrench

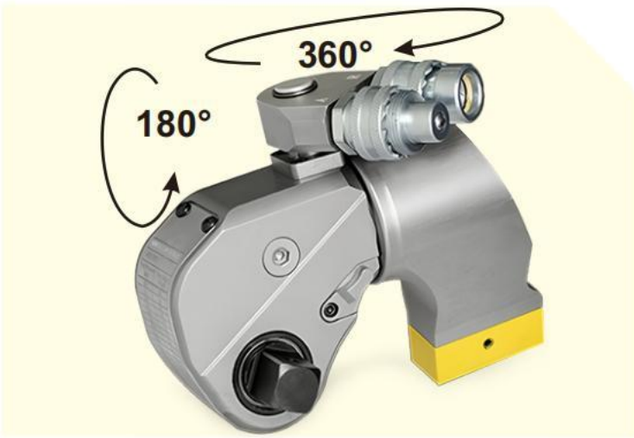

- 最大工作壓力70Mpa,精確度達到±3%。
- 從112~72000N.m共10個型號，是市面上同類產品中型號最全，螺栓覆蓋面最廣的產品。
- 360° *180° 旋轉油管接頭，無使用空間限制。
- 方驅連接高强度套筒工作，螺栓適應範圍廣。
- 扳機式鎖扣，可將360° 未調試反力臂放置在任意的固定支點上。
- 鋁鈦合金一體成型機身，高强度、高韌性新型防鬆接頭，保證油路暢通。

Maximum working pressure is 70Mpa, with an accuracy of ±3%.
With a total of 10 models ranging from 112 to 72000N.m, it is the product with the most complete range of models and the widest bolt coverage among similar products on the market.
360°*180° rotating oil pipe joint, with no space constraints for use.
Square drive connects to a high-strength socket for work, and the bolt has a wide range of adaptability.
Trigger-type latch allows the 360° unadjusted reaction arm to be placed on any fixed pivot point.
Aluminum-titanium alloy one-piece body, coupled with the high-strength and high-toughness new anti-loose joint, ensures smooth oil flow.

性能特點：
Performance:

新型防鬆快速接頭，確保油路暢通。
鋁鈦合金一體成型機體，高强度、高韌性。
激光刻印的壓力扭矩對照表,方便使用。
360° ×180° 旋轉油管接頭，無使用空間限制，方便使用。
360° 微調式反作用力臂，適應各種支點。亦可根據工況選其他型號反力臂。

New anti-loose quick connector ensures smooth oil flow.
Aluminum-titanium alloy one-piece body is characterized by high strength and high toughness.
Laser engraving pressure-torque comparison table for ease of use.
360°×180° rotating oil pipe joint has no space limitation and is convenient to use.
360° adjustable reaction arm, suitable for various fulcrums.Other types of reaction arms can also be selected according to the working conditions.

IBT系列液壓扭矩扳手選型表：
Selection table for IBT series hydraulic torque wrenches:

型 號 Model	07IBT	1IBT	3IBT	5IBT	8IBT	10IBT	15IBT	20IBT	25IBT	35IBT	50IBT
扭矩範圍 Torque Range (N.m)	112~1120	183~1837	451~4512	752~7528	1078~10780	1551~15516	2094~20942	2666~26664	3472~34725	4866~48666	7200~72000
螺栓規格 Bolt specification (M)	14~30	16~36	22~48	27~56	30~64	36~72	39~80	42~90	48~100	64~120	72~125
重 量 Weight (Kg)	1.8	2.5	5	8	11	15	22	26.5	35	50	87
驅動軸 Drive Shaft	3/4"	3/4"	1"	1-1/2"	1-1/2"	1-1/2"	2"	2-1/2"	2-1/2"	2-1/2"	2-1/2"

客户現場工況實例：：
Example of customer's on-site working conditions:

IBT系列，驅動液壓扭矩扳手
IBT Series, Drive Hydraulic Torque Wrench

IBT系列是U-WELL公司主力投放國際市場的一款專業級別的液壓扭矩扳手。其鋁鈦合金的航空材料液壓扭矩扳手重量輕，强度高，值得注意的是IBT系列液壓扭矩扳手擁有從112N.m—72000N.m共10個標準型號，其適用規格之多，螺栓覆蓋率之廣，體現出U-WELL公司從事國際螺栓服務的扎實基礎與專業精神。U-WELL品牌提供全球售後服務，擁有完全的配套供應能力，通過德國萊茵TUV認證及歐盟CE認證。

IBT series is a professional-grade hydraulic torque wrench that U-WELL Company primarily targets the international market with. Made of aluminum-titanium alloy, an aviation material, this hydraulic torque wrench is lightweight yet highly durable. Notably, the IBT series hydraulic torque wrenches come in 10 standard models ranging from 112N.m to 72000N.m. Its wide range of applicable specifications and extensive bolt coverage reflect U-WELL Company's solid foundation and professionalism in international bolt services. The U-WELL brand provides global after-sales service and has complete supply capabilities. It has obtained both the German TUV certification and the EU CE certification.

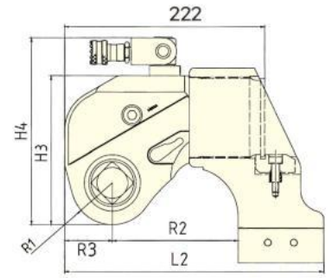

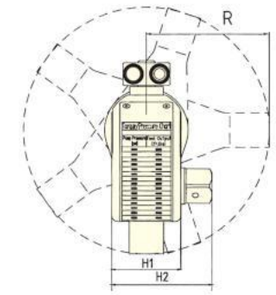

IBT系列液壓扭矩扳手尺寸表：
IBT Series Hydraulic Torque Wrench Size Chart:

型 號 Model	L1	L2	H1	H2	H3	H4	R	R1	R2	R3
07IBT	110.8	139.3	42	65.8	76.2	108.1	75	20.5	68.3	25
1IBT	144.5	173.5	50	72	96	131	91.5	26	85	29
3IBT	178	229	68	95	127	176.5	123.5	34	114	40
5IBT	210.5	270.5	80	123	149	199	140	39	137	46.5
8IBT	222	293	90	134	167	217	165	47	153	47
10IBT	245.5	317.5	100	142	182	232	178	51	154	58.5
15IBT	292.8	361.3	112	167.4	206	276.4	188.5	56	174.2	67.1
20IBT	307.5	383.5	120	183	220	270	213	59	186	71
25IBT	323	401	137	200	247	297	228	66	199	72.5
35IBT	372.5	496.5	153	216	282	332	243.5	77	241	89.5
50IBT	400	516	160	223	291	341	258	81	259	97.5

驅動型液壓扭矩扳手可選附件：
如需定制特殊反力臂，請務必事先與我司取得聯系！
Optional accessories for drive-type hydraulic torque wrenches:
If you need to customize a special reaction arm,
please be sure to contact our company in advance!

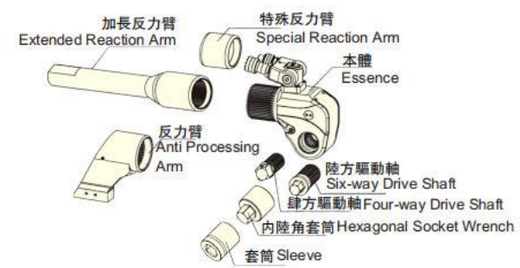

LOW系列，中空液壓扭矩扳手
LOW series, Hollow Hydraulic Torque Wrench

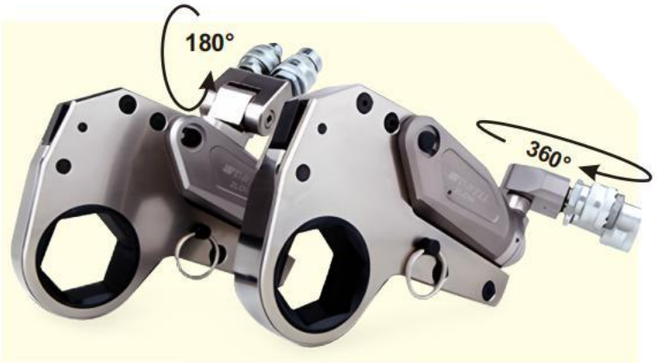

- 最大工作壓力70Mpa,精確度達到±3%。
- 從232~44593N.m共5個型號。
- 360° ×180° 以及360° ×360° 旋轉油管接頭，無使用空間限制。
- 直接作用于螺母，扭矩更精準，更輕便。
- 一體式加長設計，力臂更長，可靠性全面提升。
- 鋁鈦合金一體成型機身，高强度、高韌性。
- 新型帶齒防鬆接頭，保證油路暢通。

Maximum working pressure is 70 MPa, with an accuracy of ±3%.
There are a total of 5 models ranging from 232 to 44593 N.m.
360°×180° and 360°×360° rotating oil pipe connectors, with no space restrictions for use.
Directly acting on the nut, it provides more precise torque and is more lightweight.
Integrated extended design provides a longer lever arm and enhances overall reliability.
Aluminum-titanium alloy one-piece body is characterized by high strength and high toughness.
New toothed anti-loose joint ensures smooth oil flow.

性能特點:
Performance:

中空設計，扳手直接作用于螺母，扭矩更精確，使用更輕便。
一體式加長設計，力臂更長，可靠性更强。
360° ×180° 以及360° ×360° 旋轉油管接頭可供選擇，無使用空間限制，方便操作。
止退棘爪設計，克服扳手棘輪逆轉，提高工作效率及扭矩精度。

Hollow design allows the wrench to directly apply torque to the nut, ensuring more precise torque and easier use.
Integrated extended design provides a longer lever arm and enhanced reliability.
360°×180° and 360°×360° rotating oil pipe connectors are available, with no space restrictions for use and convenient operation.
Anti-backlash pawl design overcomes the reverse rotation of the wrench ratchet, improving work efficiency and torque accuracy.

(圖1)爲中空型液壓扭矩扳手輔件分解圖:
(Figure 1) is an exploded view of the accessories of a hollow hydraulic torque wrench:

垂直反力臂 Vertical Reaction Arm	
延長反力臂 Extended Reaction Arm	

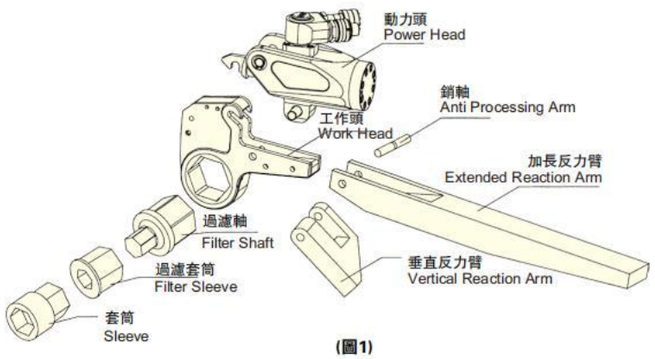

(圖1)
(Figure 1)

LOW系列液壓扭矩扳手選型表:
Selection table for LOW series hydraulic torque wrenches:

型 號 Model	扭 矩 Torque	螺母对边 Nut Opposite Edge	动力头重量 Power Head Weight	工作头重量 Weight of working head	结構尺寸 Structure Size (mm)				
	N.m	mm	kg	kg	L	H1	H2	W1	W2
2LOW	232～2328	19～55	1	1.6	196.4	125.9	102.3	32	51
	241～2414	60	1	1.7	196.4	128.5	105	32	51
4LOW	585～2510	34～36							
	585～5021	41	2	4.4	245	177	135.7	42	66
	585～5858	46～65	2	4.6	246	187	145.7	42	66
	647～6474	70～80							
8LOW	1094～10941	41～95	3.3	8	300	207	169	53	83
	1177～11774	100～105	3.3	8.4	301	216	178	53	83
14LOW	1852～18521	50～117	5.5	11.6	361	239	204	64	99
30LOW	4188～41882	85～155	11.4	29	430	303	272	85	131
	4459～44593	160～175	11.4	30	441	315	285	85	131

LOW系列，中空液壓扭矩扳手
LOW series, Hollow Hydraulic Torque Wrench

LOW系列是U-WELL公司主力投放國際市場的一款專業級別的中空型液壓扭矩扳手。與驅動型液壓扭矩扳手相比中空型液壓扭矩扳手直接作用于螺母，本身體積輕薄，非常適合在狹小的空間中作業。LOW系列中空扳手可以通過調換工作頭、裝配變徑套來適應不同的工況，它覆蓋了從S19~S175範圍內所有的螺栓。U-WELL品牌提供全球售後服務，擁有完整的配套供應能力，通過德國萊茵TUV及歐盟CE認證。

LOW series is a professional-grade hollow hydraulic torque wrench that U-WELL Company primarily targets for the international market. Compared to drive-type hydraulic torque wrenches, hollow hydraulic torque wrenches act directly on nuts, are lightweight and compact, making them ideal for working in confined spaces. The LOW series hollow wrenches can adapt to different working conditions by exchanging working heads and assembling reducers, covering all bolts ranging from S19 to S175. The U-WELL brand provides global after-sales service, has complete supporting supply capabilities, and has passed German TUV and EU CE certifications.

LOW系列液壓扭矩扳手外型尺寸參照圖:
Outline dimensions reference drawing for LOW series hydraulic torque wrenches:

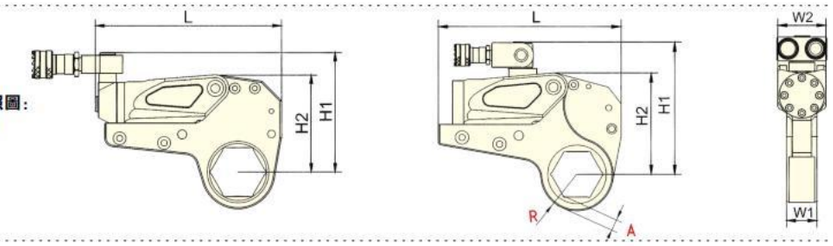

LOW系列中空扭矩扳手標準型工作頭選型表
Selection table for standard working heads of LOW series hollow torque wrenches

U-WELL可以按客户要求定制特殊型號的工作頭
U-WELL can customize special models of working heads according to customer requirements

2LOW				4LOW				8LOW				14LOW				30LOW			
型 號 Model	R	A	最大扭矩 Maximum Torque	型 號 Model	R	A	最大扭矩 Maximum Torque	型 號 Model	R	A	最大扭矩 Maximum Torque	型 號 Model	R	A	最大扭矩 Maximum Torque	型 號 Model	R	A	最大扭矩 Maximum Torque
2LOW-19	27	16	2328	4LOW-34	36	16	2510	8LOW-41	46	22	10941	14LOW-50	60	31	18521	30LOW-85	78	28	41882
2LOW-22	27	14	2328	4LOW-36	36	15	2510	8LOW-46	46	19	10941	14LOW-55	60	28	18521	30LOW-90	78	27	41882
2LOW-27	27	11	2328	4LOW-41	39	15	5021	8LOW-50	46	17	10941	14LOW-60	60	25	18521	30LOW-95	83	28	41882
2LOW-30	29	12	2328	4LOW-46	42	15	5858	8LOW-55	50	18	10941	14LOW-65	60	22	18521	30LOW-100	83	25	41882
2LOW-32	29	11	2328	4LOW-50	44	15	5858	8LOW-60	52	17	10941	14LOW-70	60	19	18521	30LOW-105	89	28	41882
2LOW-34	31	11	2328	4LOW-55	46	14	5858	8LOW-65	55	17	10941	14LOW-75	63	19	18521	30LOW-110	89	25	41882
2LOW-36	31	10	2328	4LOW-60	50	15	5858	8LOW-70	58	17	10941	14LOW-80	66	19	18521	30LOW-115	95	28	41882
2LOW-41	34	10	2328	4LOW-65	53	15	5858	8LOW-75	60	17	10941	14LOW-85	69	19	18521	30LOW-117	95	27	41882
2LOW-46	37	10	2328	4LOW-70	56	15	6474	8LOW-80	63	16	10941	14LOW-90	72	20	18521	30LOW-120	95	25	41882
2LOW-50	40	11	2328	4LOW-75	59	15	6474	8LOW-85	66	16	10941	14LOW-95	74	19	18521	30LOW-125	101	29	41882
2LOW-55	43	11	2328	4LOW-80	61	15	6474	8LOW-90	69	17	10941	14LOW-100	77	19	18521	30LOW-130	101	26	41882
2LOW-60	46	11	2414					8LOW-95	71	16	10941	14LOW-105	80	19	18521	30LOW-135	104	26	41882
								8LOW-100	75	17	11774	14LOW-110	83	19	18521	30LOW-140	110	29	41882
								8LOW-105	78	17	11774	14LOW-115	87	20	18521	30LOW-145	110	26	41882
												14LOW-117	87	19	18521	30LOW-150	116	29	41882
																30LOW-155	116	26	41882
																30LOW-160	128	36	44593
																30LOW-165	128	33	44593
																30LOW-170	128	30	44593
																30LOW-175	128	27	44593

客户現場工況實例:
Example of customer's on-site working conditions:

H系列，中空液壓扭矩扳手
H series, Hollow Hydraulic Torque Wrench

- 最大工作壓力70Mpa,精確度達到±3%。
- 從262~48481N.m共5個型號。
- 360° ×360° 旋轉油管接頭，無使用空間限制。
- 直接作用于螺母，扭矩更精準、可靠。
- 超薄設計，適用在窄小的空間適用。
- 動力頭與工作頭易于拆裝。
- 新型帶齒防鬆接頭，保證油路暢通。

Maximum working pressure is 70 MPa, with an accuracy of ±3%.
There are a total of 5 models ranging from 262 to 48481 N.m.
360°×360° rotating oil pipe joint, with no space constraints for use.
Acting directly on the nut, the torque is more precise and reliable.
Ultra-thin design, suitable for use in narrow spaces.
Power head and the working head are easy to disassemble and assemble.
New toothed anti-loose connector ensures smooth oil flow.

性能特點：
Performance:

新型防鬆接頭，保證油路暢通。
360° ×360° 旋轉油管接頭可供選擇，無使用空間限制，方便操作。
一體式反作用力臂設計，提高可靠性。
中空設計，扳手直接作用于螺母，扭矩更精確、更輕便。
特殊設計防塵罩，有效保證內部結構工作環境清潔。
New anti-loose connector ensures smooth oil flow.
360°×360° rotating oil pipe connectors are available, with no space restrictions and easy to operate.
Integrated reaction arm design enhances reliability.
Hollow design allows the wrench to directly apply force to the nut, ensuring more precise and lighter torque.
Specially designed dust cover effectively ensures a clean working environment for the internal structure.

(圖1)爲中空型液壓扭矩扳手輔件分解圖：
(Figure 1) is an exploded view of the accessories of a hollow hydraulic torque wrench:

垂直反力臂 Vertical Reaction Arm	
延長反力臂 Extended Reaction Arm	

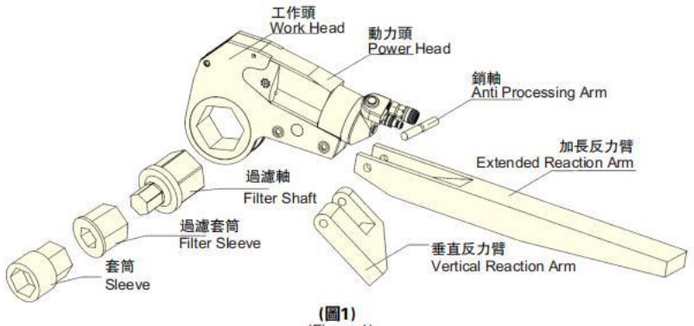

(圖1)
(Figure 1)

H系列液壓扭矩扳手選型表：
Selection table for H series hydraulic torque wrenches:

型 號 Model	扭 矩 Torque	螺母对边 Nut Opposite Edge	重量 Weight	结構尺寸 Structure Size (mm)					
	N.m	mm	kg	L	H1	H2	W1	W2	A
H27	262～2625	19～46	0.9	193	125	97	32	51	10～15
	306～3068	50～60	0.9	193	136	108	32	51	10～11
H54	537～5372	27～65	1.9	250	158	125	41	64	11～19
	603～6037	70～80	1.9	250	169	136	41	64	11.7～12
H120	1173～11737	50～80	3.4	310	189	157	52	78	15～15.2
	1434～14349	85～105	3.4	310	214	182	52	78	16～22
H210	2121～21216	70～100	5.9	378	223	191	64	97	8～21
	2312～23124	105～115	5.9	378	236	204	64	97	18～24
H430	4379～43792	80～117	16.1	405*	291*	242*	83	93	25～31*
	4848～48481	120～175	16.1	425*	309*	260*	83	93	25～34*

H系列，中空液壓扭矩扳手
H series, Hollow Hydraulic Torque Wrench

H系列中空型液压扭矩扳手是专门为狭窄空间设计的。它可以以一台动力头配备多台不同规格的工作头来适应不同的螺栓工况，工作头可以在没有任何工具辅助的情况下随意更换，而且即学即会，简单的更换操作可以在工作中节省大量的时间，以提高工作效率。铝钛合金的航空材料使其拥有轻便的机身，适应超高强度的工作。U-WELL品牌提供全球售后服务，拥有完整的配套供应能力，通过德国莱茵TUV及欧盟CE认证。

H series hollow hydraulic torque wrench is specifically designed for confined spaces. It can accommodate different bolt conditions by equipping a single power head with multiple working heads of various specifications. The working heads can be easily replaced without any tool assistance, and the simple replacement process can save a significant amount of time during work, thereby enhancing work efficiency. Made of aluminum-titanium alloy, an aviation material, it boasts a lightweight body that can withstand ultra-high-strength work. The U-WELL brand provides global after-sales service, possesses complete supply capabilities, and has obtained both German TUV and EU CE certifications.

H系列液壓扭矩扳手外型尺寸參照圖：
Outline dimensions reference drawing for H series hydraulic torque wrenches:

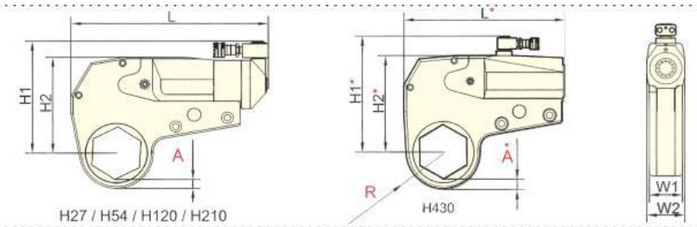

H系列中空扭矩扳手標準型工作頭選型表
Selection table for standard working heads of H series hollow torque wrenches

U-WELL可以按客户要求定制特殊型號的工作頭
U-WELL can customize special models of working heads according to customer requirements

H27				H54				H120				H210				H430			
型 號 Model	R	A	最大扭矩 Maximum Torque	型 號 Model	R	A	最大扭矩 Maximum Torque	型 號 Model	R	A	最大扭矩 Maximum Torque	型 號 Model	R	A	最大扭矩 Maximum Torque	型 號 Model	R	A	最大扭矩 Maximum Torque
H27-19	26	15	2625	H54-27	36	19	5372	H120-50	44	15	11737	H210-70	59	18	21216	H430-80	72	25	43792
H27-22	26	14	2625	H54-30	35	17	5372	H120-55	47	15	11737	H210-75	62	18	21216	H430-85	78	28	43792
H27-27	26	11	2625	H54-32	35	16	5372	H120-60	50	15	11737	H210-80	65	18	21216	H430-90	78	25	43792
H27-30	28	11	2625	H54-34	35	16	5372	H120-65	53	15	11737	H210-85	68	21	21216	H430-95	84	28	43792
H27-32	28	10	2625	H54-36	35	14	5372	H120-70	56	15	11737	H210-90	71	18	21216	H430-100	84	26	43792
H27-34	31	11	2328	H54-41	35	11	5372	H120-75	58	15	11737	H210-95	77	21	21216	H430-105	90	28	43792
H27-36	31	10	2625	H54-46	37	11	5858	H120-80	61	15	11737	H210-100	77	18	21216	H430-110	94	31	43792
H27-41	34	10	2625	H54-50	41	12	5372	H120-85	66	16	14349	H210-105	79	18	23124	H430-115	94	28	43792
H27-46	37	10	2625	H54-55	44	13	5372	H120-90	69	16	14349	H210-110	87	24	23124	H430-117	94	28	43792
H27-50	40	11	3068	H54-60	47	12	5372	H120-95	71	16	14349	H210-115	87	21	23124	H430-120	101	31	48481
H27-55	42	11	3068	H54-65	50	12	5372	H120-100	77	22	14349					H430-125	101	28	48481
H27-60	50	10	3068	H54-70	52	12	6037	H120-105	77	19	14349					H430-130	101	25	48481
				H54-75	56	12	6037									H430-135	105	26	48481
				H54-80	58	12	6037									H430-140	110	29	48481
																H430-145	110	26	48481
																H430-150	115	29	48481
																H430-155	115	26	48481
																H430-160	121	29	48481
																H430-165	121	26	48481
																H430-170	128	30	48481
																H430-175	128	27	48481

客户現場工况實例：
Example of customer's on-site working conditions:




LP3系列，液壓扭矩扳手專用泵(增强型)
LP3 Series, Special Pump For Hydraulic Torque Wrench
(Enhanced Version)

*可根據需求選配四同步
(*Four-synchronization can be selected according to requirements)

油箱容量: Reservoir Capacity:	5.5 L
額定壓力下流量: Flow at Rated Pressure:	0.8-7.0L/min
電動機規格: Flow at Rated Pressure:	1.1 KW
最大工作壓力: Maximum Operating Pressure:	70 Mpa

- 電動三級流量液壓扭矩扳手泵。
- 可選擇連接多個扭矩扳手操作。
- 自帶油冷却器，適合連續操作，帶外保護鋼架。
- ϕ100壓力表，鋁制油箱帶油位指示器。
- 70–700bar之間各種壓力調節。
- 可連續操作的設計，軟管米數可選。
- 通過德國萊茵TUV認證及歐盟CE認證。

Electric three-stage flow hydraulic torque wrench pump.
Multiple torque wrenches can be connected for operation.
Equipped with an oil cooler, suitable for continuous operation, and featuring an external protective steel frame.
A φ100 pressure gauge, an aluminum fuel tank with a fuel level indicator.
Pressure regulation within the range of 70-700 bar.
Designed for continuous operation, with a selectable hose length.
It has obtained both the TUV certification from Germany and the CE certification from the European Union.

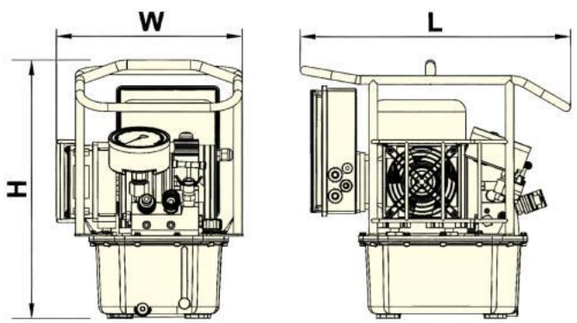

型 號 Model Number	驅動方式 Drive mode	電 壓 Voltage (V)	頻 率 Frequency (Hz)	儲油量 Oil reserves (L)	功 率 Power (Kw)	壓 力 Working Pressure (Mpa)	流 量 Volume of Flow (L/min)	冷却器 Cooler	油口輸出 Oil Outlet Output	重 量 Weight (kg)	外形尺寸 Dimensions L×W×H(mm)
LP3-2	電 動 Electric	220	50	5.5	1.1	70	7-1.6-0.8	是 Yes	4×1/4"NPT	25	445×304×426
LP3-4	電 動 Electric	220	50	5.5	1.1	70	7-1.6-0.8	是 Yes	8×1/4"NPT	27	461×304×426

KLW4010系列，液壓扭矩扳手專用泵
KLW4010 Series, Special Pump For Hydraulic Torque Wrench

*可根據需求選配四同步
(*Four-synchronization can be selected according to requirements)

油箱容量: Reservoir Capacity:	8.0 L
額定壓力下流量: Flow at Rated Pressure:	0.8-7.0L/min
電動機規格: Flow at Rated Pressure:	1.1KW
最大工作壓力: Maximum Operating Pressure:	70 Mpa

- 電動三級流量液壓扭矩扳手泵。
- 可選擇連接多個扭矩扳手操作。
- 自帶油冷却器，適合連續操作，帶外保護鋼架。
- ϕ100壓力表，鋁制油箱帶油位指示器。
- 70–700bar之間各種壓力調節。
- 可連續操作的設計，軟管米數可選。
- 通過德國萊茵TUV認證及歐盟CE認證。

Electric three-stage flow hydraulic torque wrench pump.
Multiple torque wrenches can be connected for operation.
Equipped with an oil cooler, suitable for continuous operation, and featuring an external protective steel frame.
A φ100 pressure gauge, an aluminum fuel tank with an oil level indicator.
Various pressure adjustments between 70-700 bar.
Designed for continuous operation, with a selectable hose length.
It has obtained both the TUV Rheinland certification and the CE certification from the European Union.

性能特點:
Performance:

- 鋁制金屬架，方便携帶更保護機身。
- 外置壓力調節器，内置釋放閥保護工具。
- 輕量化設計機身，減小整機質量，携帶輕便。
- 系統壓力釋放按鈕，可以在停泵斷電情况下釋放壓力。
- 可訂制遥控綫長度，標準配置6米。

Aluminum metal frame, convenient to carry and provides better protection for the device.
External pressure regulator, with built-in relief valve for tool protection.
lightweight design of the body reduces the overall weight, making it easy to carry.
System pressure release button can be used to release pressure in the event of pump shutdown and power loss.
Length of the remote control cable can be customized, with a standard length of 6 meters.

型 號 Model Number	驅動方式 Drive mode	電 壓 Voltage (V)	頻 率 Frequency (Hz)	儲油量 Oil reserves (L)	功 率 Power (Kw)	壓 力 Working Pressure (Mpa)	流 量 Volume of Flow (L/min)	冷却器 Cooler	油口輸出 Oil Outlet Output	重 量 Weight (kg)	外形尺寸 Dimensions L×W×H(mm)
KLW4010-2	電 動 Electric	220	50	8.0	1.1	70	7-1.6-0.8	是 Yes	4×1/4"NPT	25	307×407×450
KLW4010-4	電 動 Electric	220	50	8.0	1.1	70	7-1.6-0.8	是 Yes	8×1/4"NPT	27	307×407×470

CPC–120B 液壓綫纜剪
CPC-120B Hydraulic Cutter Head

CPC–120B

工作能力： Capacity:	10 T
最大剪切能力： Maximum Cutting Capacity:	∅120mm
最大工作壓力： Maximum Operating Pressure:	700 bar

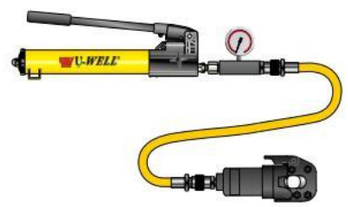

- 方便于配電箱内切斷作業，適用于高壓PE、IV電綫、電話綫切斷迅速；
- 高碳鎢合金鋼刀片堅固用熱處理HRC–65°；
- 需配合液壓泵CTE–25AG、P–392等使用，出廠不含液壓泵，需另選購；
- 快速接頭接口螺紋配3/8–18NPT。

- Convenient for power distribution phase cut-off operation, suitable for high voltage PE, IV wire, telephone line cut quickly;
- High carbon tungsten alloy steel blade with strong heat treatment HRC - 65 °;
- Need to cooperate with hydraulic pump CTE-25AG, P-392 and other pump, the hydraulic pump need to choose additionally.
- Quick coupling thread with 3/8-18NPT.

注意！
嚴禁剪切鋼性電纜、鋼絲繩
CAUTION!
It is strictly forbidden to cut steel cable and wire rope

以上產品適合以下電纜使用， ✔爲適用，✘爲不適用
The above products are suitable for the following cables, ✔applicable, ✘Not applicable

銅鋁電纜 Copper Aluminum Cable	鎧裝電纜 Armoured cable	海底電纜 Submarine cable	鋼芯電纜 Steel core cable	鋼絲繩 Steel wire rope	鋼絞綫 Steel strand	螺紋鋼 Deformed steel bar	鐵鏈綫 Chain line
✔	✔	✘	✘	✘	✘	✘	✘

CPC–120B 液壓綫纜剪
CPC-120B Hydraulic cable shears

出 力 Output (T)	剪切範圍 Cutting Range (mm)	重 量 (kg)	備 注 Remarks
10	鎧裝電纜 Armoured cable ∅120mm	10.3	單作式 Single-acting

分體式液壓綫纜剪
Split Type Hydraulic Cutter Head

注意！
嚴禁剪切鋼性電纜、鋼絲繩
CAUTION!
It is strictly forbidden to cut steel cable and wire rope

工作能力： Capacity:	12 T
最大剪切能力： Maximum Cutting Capacity:	∅120mm
最大工作壓力： Maximum Operating Pressure:	700 bar

SDK120C

注意！
該工具爲非絶緣工具，不得在帶電電路上或其附近使用本設備。
開始剪切前，請確定剪切過程涉及的所有零件均與帶電電路斷開。
CAUTION!
This tool is a non-insulated tool and must not be used on live circuits or near.
Before starting to cut, make sure that all parts involved in the cutting process are disconnected from the live circuit.

- 雙支撑脚保證地面上的高穩定性
- 用于在700bar工作壓力下與液壓驅動裝置連接，以獲得可能最好的剪切效果
- 剪切銅鋁電纜（鎧裝電纜）
- 極其寬廣的剪切範圍高達120mm也適用于細絞綫電纜
- 异常輕和緊凑設計

- Double support feet ensure high stability on the ground
- For connection to hydraulic drives at 700 bar working pressure for the best cut.
- Shear copper aluminum cable (armored cable)
- Extremely wide cutting range up to 120mm also suitable for thin stranded cable
- Abnormally light and compact design

以上產品適合以下電纜使用， ✔爲適用，✘爲不適用
The above products are suitable for the following cables, ✔applicable, ✘Not applicable

銅鋁電纜 Copper Aluminum Cable	鎧裝電纜 Armoured cable	海底電纜 Submarine cable	鋼芯電纜 Steel core cable	鋼絲繩 Steel wire rope	鋼絞綫 Steel strand	螺紋鋼 Deformed steel bar	鐵鏈綫 Chain line
✔	✔	✘	✘	✘	✘	✘	✘

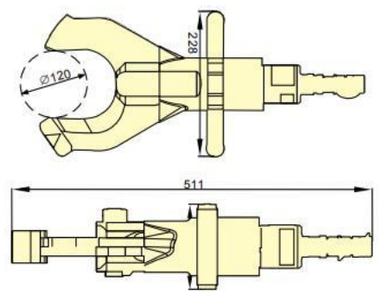

型 號 Model	工作能力 Capacity (T)	剪切能力 Cutting Capacity (mm)	工作壓力 Working pressure (bar)	長 度 Length (mm)	重 量 (kg)
SDK120C	12	∅120	700	511	8.7

SH-70B 液壓衝孔器
SH-70B Hydraulic Hole Puncher

工作能力: Capacity:	31 T	工作能力: Capacity:	100-200 ton
喉 深: Deep Throat:	75mm	行程: Stroke:	24-35mm
最大工作壓力: Maximum Operating Pressure:	70 Mpa	最大外徑: Maximum Diameter:	76 mm

本衝孔器整體合金鋼鍛造，更高强度，堅固耐用適用于銅鋁排等金屬材料之衝孔作業，衝孔作業速度快，定位標準不偏移，可以制作各種形狀的衝孔模，液壓衝孔可以免除鑽孔時產生的切屑，作業時爲安全以及清潔，可携帶到現場或是固定于工廠内進行大批量的衝孔作業，標準配件∅10.5, ∅12, ∅17.5, ∅20.5mm衝孔模具各一套。

- Punch smooth, precise holes in seconds; much faster than drilling.
- Fully portable for construction, maintenance and service applications, or can be mounted on a workbench for production jobs. Has carrying handle for precise locating.
- Rugged, forged steel "C" frame for great strength and durability.
- Dual action, spring loaded stripper holds material during punching operation, strips material from punch on return. Scribe lines on stripper aid in locating the punch .

型 號 Model	工作能力 Capacity (T)	喉 深 Throat Deep (mm)	衝孔厚度 Material Thickness (mm)		操作壓力 Operating Pressure (Mpa)	重 量 (kg)
			銅 質 Copper	鐵 質 Iron		
SH-70B	31	75	12	10	70	10

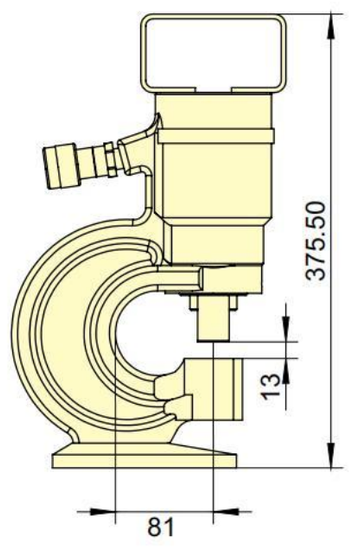

分離式壓著工具
Compression Tool

金具種類 Fitting type	適用導綫 Wire	壓模編號 Die number 鋁 Aluminum	壓模編號 Die number 鋼 Steel	適用導綫 Wire	壓模編號 Die number 鋁 Aluminum	壓模編號 Die number 鋼 Steel
接綫管 Connection tube	LGJ-240/30	L-36	G-20	LGJ-400/25	L-45	G-20
	LGJ-240/40	L-36	G-20	LGJ-400/35	L-45	G-22
	LGJ-240/55	L-36	G-22	LGJ-400/50	L-45	G-24
	LGJ-300/15	L-40	G-18	LGJ-500/35	L-52	G-22
	LGJ-300/20	L-40	G-18	LGJ-500/45	L-52	G-24
	LGJ-300/25	L-40	G-20	LGJ-500/65	L-52	G-26
	LGJ-300/40	L-40	G-20	LGJ-630/45	L-60	G-24
	LGJ-300/50	L-40	G-18	LGJ-630/55	L-60	G-26
	LGJ-400/20	L-45	G-20	LGJ-800/55	L-65	G-26
	LGJ-400/25	L-45	G-22	LGJ-800/70	L-65	G-26
耐張綫夾 Clamp	LGJ-150/20	L-30	G-12	LGJ-400/20	L-45	G-14
	LGJ-150/22	L-30	G-14	LGJ-400/25	L-45	G-14
	LGJ-150/35	L-30	G-16	LGJ-400/35	L-45	G-16
	LGJ-185/25	L-32	G-14	LGJ-400/50	L-45	G-20
	LGJ-185/30	L-32	G-14	LGJ-500/35	L-52	G-16
	LGJ-185/45	L-36	G-20	LGJ-500/45	L-52	G-18
	LGJ-240/30	L-32	G-18	LGJ-500/65	L-52	G-22
	LGJ-240/40	L-36	G-16	LGJ-630/45	L-60	G-18
	LGJ-240/55	L-36	G-16	LGJ-630/55	L-60	G-20
	LGJ-300/15	L-40	G-14	LGJ-630/80	L-60	G-24
	LGJ-300/20	L-40	G-14	LGJ-800/55	L-65	G-20
	LGJ-300/25	L-40	G-14	LGJ-800/70	L-65	G-22
	LGJ-300/40	L-40	G-16	LGJ-800/100	L-65	G-26
	LGJ-300/50	L-40	G-18			

型 號 Model	適用最大外徑 Maximum diameter (mm² ∅)	出 力 Capacity (ton)	重 量 (kg)	活塞行程 Piston stroke (mm)	尺 寸 Size (mm)
CO-100S	銅鋁端子套管76 Copper and aluminum terminal bushing 76	100	33	24	374×180
CO-200S	銅管套36 Copper sleeve 36	200	97	35	472×250

- 特別選擇高碳鋼材質一體原材料CNC電腦加工，品質優良，抗張性强。
- 模具可以依被壓着物來計算壓縮比。
- 雙回路CO-100S和CO-200S均可配PGM系列機動泵在野外工作，CO-100S還可以配CTE-25AS等雙回路電動液壓泵站
- 户外施工時，可以配套引擎泵，每次作業僅8-12秒，施工最迅速，安全。
- 金具依國家標準制造，以CNC綫切割尺寸標準，精確度精準。

- Large capacity for transmission and distribution applications
- Easy die set installation
- Capacity for U- or shell-type dies
- Double acting conversion kit included
- Hinged flip-top head
- Carrying handles for portability
- Pressure matched quick-couplers supplied
- Carrying Case is included with 100 and 200 ton

H 系列 工業壓床
H-Series,Hydraulic Workshop Presses

- 工作能力：10–100tons
- 最大壓板間距&寬度：42.0&41.5mm
- 最大工作壓力：700bar
- 重型焊接框架增强及耐用性
- 標準優偉牌的動力源及液壓缸確保提供高性能、無故障操作
- 所有壓床都配有900系列重型橡膠軟管，確保經久耐用
- 25、50和100噸壓床具有渦輪杆提升裝置，可安全、輕鬆地調整壓板間距
- Capactiy for work:10-100tons
- Maximum plate space & width:42.0&41.5mm
- Maximum work pressure:700bar
- Heavy welded frame is equipped to reinforce the stength and durability
- The power supply and hydraulic pump of standard"U-WELL"assures the operations high property and trouble-free.
- All pressure beds are equipped with heavy-duty rubber hose of 900 series in order to be durable.
- 25,50 and 100 tons pressure beds have a device to lift the vortex and turbine to easily adjust the plate space safetily.

工作能力：
Capacity: **10-200 ton**

最大壓板間距 x 寬度：
Maximum Daylight×Width: **1384×1219mm**

最大工作壓力：
Maximum Operating Pressure: **700 bar**

壓床工作能力 Capacity (tons)	壓床型號 Model	泵型號 Pump type	液壓缸型號 Hydraulic pump model	H–形壓床尺寸(mm) Hydraulic Cutterheads size A (最大) Maximum	A (最小) Minimum	B	C	D	E
10	IPE-1215	IPE-220	RC–1010	1016	62	–	1187	127	473
	IPH-1240	P–392	RC–1010	1016	62	–	1187	127	473
	IPH-1234	P–84	RR–1010	1016	62	–	1187	127	473
25	IPE-2505	IPE-220	RC–256	1384	177	–	1447	301	736
	IPE-2510	IPE-220	RC–2514	1384	177	–	1447	301	736
	IPH-2531	P–80	RC–2514	1384	177	–	1447	301	736
30	IPE-3060	IPE-220	RR–3014	1384	177	–	1447	301	736
	IPH-3080	P–84	RR–3014	1384	177	–	1447	301	736
50	IPE-5010	IPE-220	RC–5013	1233	179	476	1371	263	730
	IPH-5030	P–462	RC–506	1233	179	476	1371	263	730
	IPH-5031	P–80	RC–506	1233	179	476	1371	263	730
	IPE-5005	IPE-220	RC–506	1233	179	476	1371	263	730
	IPE-5060	IPE-220	RR–5013	1233	179	476	1371	263	730
	IPH-5080	P–464	RR–5013	1233	179	476	1371	263	730
100	IPE-10010	IPE-220	RC–10010	1079	177	508	1295	296	889
	IPH-10030	P–462	RC–10010	1079	177	508	1295	296	889
	IPE-10060	IPE-220	RR–10013	1079	177	508	1295	296	889
	IPH-10080	P–464	RR–1006	1079	177	508	1295	296	889
150	IPE-15065	IPE-220	RR–15013	1231	317	711	1384	254	1219
200	IPE-20065	IPE-220	RR–20013	1231	317	711	1384	254	1219

工業壓床
Hydraulic Workshop Presses

壓床工作能力 Capacity tons(kN)	最大壓板間距 Maximum daylight opening (mm)	最大壓板寬 Maximum platen width (mm)	動力類型 Power type 類型 Type 手動 Hand	電動 Electric	液壓閥 Hydraulic valve 手動 Hand	電動 Electric	壓床型號 Model	液壓缸 Hydraulic pump model		行程 stroke (mm)	速度 speed (mm/秒)* mm/sec.* 快進速度 Tool Feed Speed	衝壓速度 Punching Speed
10 (89)	1016	473		●	●		IPE-1215	●		254	28	3.8
	1016	473	●		●		IPH-1240	●		254	{7.8}	{1.7}
	1016	473	●		●		IPH-1234		●	254	{11}	{1.7}
25 (223)	1384	736		●	●		IPE-2505	●		152	16	1.6
	1384	736		●		●	IPE-2510	●		355	23	3.6
	1384	736	●		●		IPH-2531	●		355	{4.9}	{0.7}
30 (267)	1384	736		●		●	IPE-3060		●	355	18	2.8
	1384	736	●		●		IPH-3080		●	355	{3.6}	{0.7}
50 (445)	1233	730		●		●	IPE-5010	●		330	20	1.9
	1233	730	●		●		IPH-5030	●		152	{19}	{0.7}
	1233	730	●		●		IPH-5031	●		152	{2.3}	{0.3}
	1233	730		●	●		IPE-5005	●		152	7.7	0.8
	1233	730		●		●	IPE-5060		●	330	20	1.9
	1233	730	●		●		IPH-5080		●	330	{19}	{0.7}
100 (890)	1079	889		●		●	IPE-10010	●		254	14	1.0
	1079	889	●		●		IPH-10030	●		254	{10}	{0.4}
	1079	889		●		●	IPE-10060		●	330	11	1.0
	1079	889	●		●		IPH-10080		●	152	{10}	{0.4}
150 (1335)	1231	1219		●		●	IPE-15065			330	9	1.4
200 (1780)	1231	1219		●		●	IPE-20065			330	6.7	1.0

H–形壓床尺寸(mm) Hydraulic Cutterheads size F	G	H	J	K	L	M	N	重量 (kg)	壓床型號 Model
632	–	–	755	108	189	889	1320	135	IPE–1215
632	–	–	755	108	189	889	1320	71	IPH–1240
632	–	–	755	108	189	889	1320	85	IPH–1234
1028	101	336	762	133	271	673	1930	274	IPE–2505
1028	101	336	762	133	271	673	1930	313	IPE–2510
1028	101	336	762	133	271	673	1930	281	IPH–2531
1028	101	336	762	133	271	673	1930	325	IPE–3060
1028	101	336	762	133	271	673	1930	301	IPH–3080
1085	127	222	914	184	333	781	1930	495	IPE–5010
1085	127	222	914	184	333	781	1930	439	IPH–5030
1085	127	222	914	184	333	781	1930	420	IPH–5031
1085	127	222	914	184	333	781	1930	421	IPE–5005
1085	127	222	914	184	333	781	1930	499	IPE–5060
1085	127	222	914	184	333	781	1930	455	IPH–5080
1295	171	222	914	222	395	841	1930	776	IPE–10010
1295	171	222	914	222	395	841	1930	751	IPH–10030
1295	171	222	914	222	395	841	1930	816	IPE–10060
1295	171	222	914	222	395	841	1930	755	IPH–10080
1706	231	333	1117	333	555	1212	2286	1794	IPE–15065
1706	231	333	1117	333	555	1212	2286	1794	IPE–20065

**液壓缸類型
** type of hydraulic cylinder

= 單作用 彈簧回程 Single-acting,spring return cylinder

= 雙作用 液壓回程 Doubleacting,hydraulic return

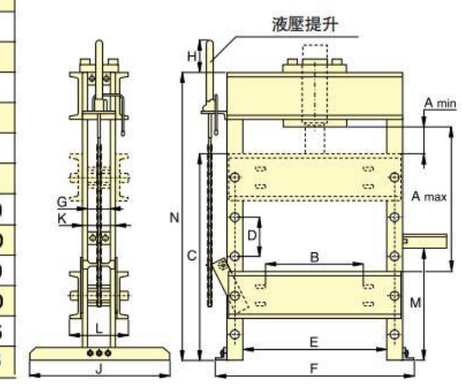

液壓移動式架車機
Hydraulic Toughlift Jacking System

液壓架車機在頂升火車車廂

工作能力： Capacity:	50-100 ton
行程： Stroke:	330-508mm
最大工作壓力: Maximum Operating Pressure:	700 bar

- 堅固的耐重載結構使架車機具有更長的使用壽命
- 大型底座墊支撐油缸
- 全方位車輪便于運輸與安放
- 油缸在緊急情況發生時液控單向閥能提供壓力自鎖
- 油缸和泵便于拆卸，可方便地用于其它場合或進行維修

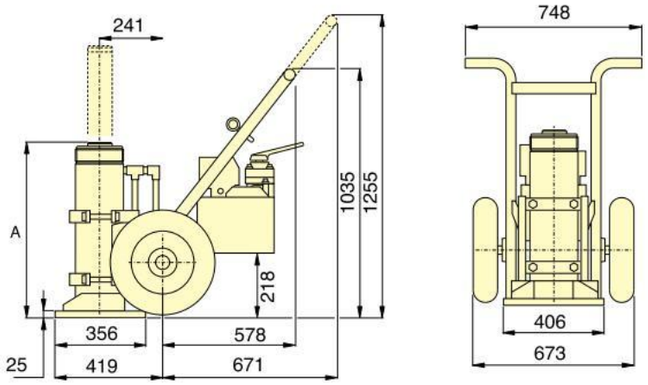

尺寸單位: mm

- The strong and heavy-duty structure makes the machine have a long service life.
- Large base pad supports oil cylinder.
- Omni-directional wheels are convenient for transportation and placement.
- Hydraulic control check valve provides pressure self - locking in case of emergency.
- The cylinder and pump are easy to disassemble and can be easily used in other occasions or for maintenance.

泵類型 Pump type	承載能力 Capacity ton (kN)	行程 Stroke (mm)	型號 Model	本體高度 Collapsed Height (mm)	速度 Speed mm/sec 負載 load	速度 Speed mm/sec 空載 no-load	重量 (kg)
電動泵 Electric pump	50 (498)	330	RJI-5013	535	0.05	0.51	270
		508	RJI-5020	759	0.05	0.51	283
	100 (933)	330	RJI-10013	549	0.08	0.95	295
		457	RJI-10018	713	0.08	0.95	327

壓力表附件
Gauge Accessories

A通過使用壓力表座，壓力表能够輕鬆的安裝到液壓系統
A gauge is easily installed into your hydraulic system using a gauge adaptor.

工作壓力: Operating Pressure:	700 bar

GA, NV, V 系列 Series

壓力表座（GA–系列）
- 便于將壓力表安裝在系統上
- 公端螺紋裝進泵或液壓缸口、母端與軟管或接頭連接，第三個螺紋孔口用于壓力表連接
- GA–918 提供旋轉連接

Gauge Adaptors (GA-Series)
- For easy mounting of a pressure gauge onto your system
- Male end screws into pump or cylinder port, female end accepts hose or coupler, 3rd port is for gauge connection
- GA-918 provides for swivel connection

型號 Model Number	壓力表口 Gauge Port (NPTF)	公端 Male End (NPTF)	母端 Female End (NPTF)	尺寸 (mm) Dimensions (mm) A	B	C	D	E	F
GA-1	½"	⅜"	⅜"	71	31	½" NPTF	⅜" NPTF	⅜" NPTF	32
GA-2	½"	⅜"		155	35	½" NPTF	⅜" NPTF	⅜" NPTF	32
GA-3	¼"	⅜"		133	48	¼" NPTF	⅜" NPTF	⅜" NPTF	32
GA-4	½"	¼"		111	35	½" NPTF	¼" NPTF	⅜" NPTF	32

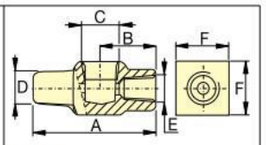

GA-1

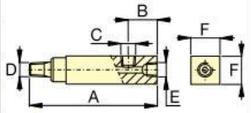

GA-2, GA-3, GA-4

旋轉附件(GA–918) Swivel Adaptor (GA-918)
- 簡化壓力表安裝與辯讀
- Simplifies gauge installation and reading

型號 Model Number	尺寸 (mm) Dimensions (mm) A	B	C	D	E	S	S1
GA-918	117	43	½" NPTF	28.5	½" NPTF	29	38

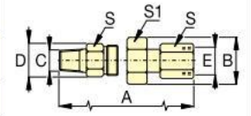

針閥（V– 及 NV– 系列）
- NV–251與 V–91 都提供手動截止功能
- 303 不銹鋼杆，螺紋16牙/inch (NV–251).

Needle Valves (V- and NV-Series)
- Both NV-251 and V-91 provide positive shut-off
- 303 stainless steel stem, 16 threads/in (NV-251)

型號 Model Number	節流孔 Orifice (mm)	螺紋尺寸 Thread Size	尺寸 (mm) Dimensions (mm) A	B	C	D	E	F	H
NV-251	4.3	¼" NPTF	57	29	¼" NPTF	57	46	19	19
V-91	4.8	½" NPTF	89	32	½" NPTF	64	32	37	37

NV-251

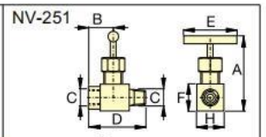

V-91

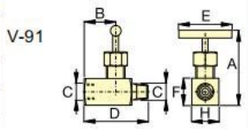

油路塊 Manifolds

產品描述 Description		型號 Model Number	尺寸 (mm) Dimensions (mm)
178mm長、帶7個母接口的油路塊 7-port Manifold, short		A-64	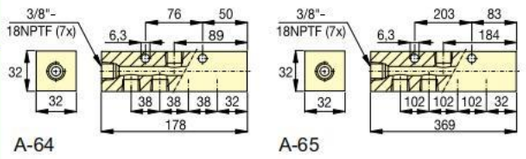
369mm長的油路塊在其上直接安裝控制閥。 帶7個內螺紋接口。 堵頭，0.38NPTF。 7-port Manifold, long allows direct mounting of control valves to the manifold.		A-65	A-64 A-65
6接口六角形油路塊，所有的3/8"–18NPTF油口都配有堵頭。 6-port Manifold, hexagon Plugs furnished for all ports 3/8"-18 NPTF		A-66	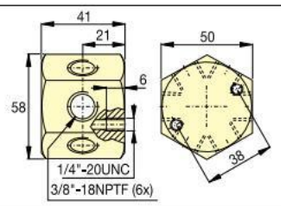
分流節流油路塊 功能爲以分流閥門可控制2個或4個單作用油缸同步。 油口均爲⅜"-18NPTF。 AM–21帶5個⅜"NPTF接口 AM–41帶7個⅜"NPTF接口 Control Manifolds For control of two or four single-acting cylinders simultaneously. AM-21 with 5 ports ⅜"NPTF. AM-41 with 7 ports ⅜"NPTF.		AM-21 AM-41	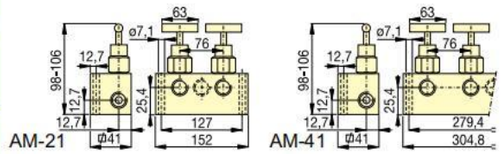
分流節流油路塊 功能爲以分流閥門可控制2個或4個單作用油缸同步。 油口均爲⅜"-18NPTF。 AM–2帶5個 ⅜"NPTF接口 AM–4帶7個 ⅜"NPTF接口 Control Manifolds For control of two or four single-acting cylinders simultaneously. AM-2 with 5 ports⅜"NPTF AM-4 with 7 ports⅜"NPTF.		AM-2 AM-4	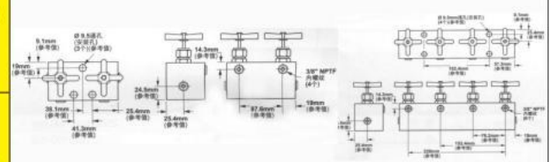

FZ 接頭系列
FZ Fittings Series

管接頭 Fittings 700 bar		型號 Model Number	尺寸 (mm) Dimensions (mm) A	B	C	D	
直角管接頭 Street Elbow 從:From: "–NPTF 雄 Male 到:To: "–NPTF 雌 Female		FZ-1616	23	33	⅜"-18 NPTF	⅜"-18 NPTF	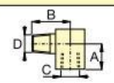
變徑接頭 Reducing Connector 從:From: ⅜"–NPTF 雌 Female 到:To: ¼"–NPTF 雌 Female		FZ-1615	28	25	⅜"-18 NPTF	¼"-18 NPTF	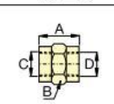
從:From: ½"–NPTF 雌 Female 到:To: ⅜"–NPTF 雌 Female		FZ-1625	47	29	½"-14 NPTF	⅜"-18 NPTF	
直通接頭 Hexagon Nipple 從:From: 到:To: ¼"–NPTF ¼"–NPTF		FZ-1608	38	16	¼"-18 NPTF	¼"-18 NPTF	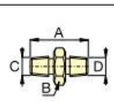
⅜"–NPTF ⅜"–NPTF		FZ-1619	51	19	⅜"-18 NPTF	⅜"-18 NPTF	
⅜"–NPTF ⅜"–NPTF		FZ-1617	37	19	⅜"-18 NPTF	⅜"-18 NPTF	
直通接頭 Coupling 從: From: 到: To: ⅜"–NPTF ⅜"–NPTF		FZ-1614	29	23	⅜"-18 NPTF	⅜"-18 NPTF	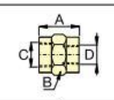
¼"–NPTF ¼"–NPTF		FZ-1605	29	19	¼"-18 NPTF	¼"-18 NPTF	
四通接頭 Cross 從: From: ⅜"–NPTF 雌 Female 到: To: ⅜"–NPTF 雌 Female		FZ-1613	45	25	⅜"-18 NPTF	–	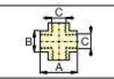
三通接頭 Tee 從: From: 到: To: ⅜"–NPTF ⅜"–NPTF		FZ-1612	45	25	⅜"-18 NPTF	–	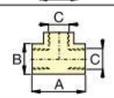
¼"–NPTF ¼"–NPTF		FZ-1637	45	24	¼"-18 NPTF	–	
直角管接頭 Street Tee 從:From: ⅜"–NPTF 雌 Female 到:To: ⅜"–NPTF 雄 Male		BFZ-16312	56	26	⅜"-18 NPTF	⅜"-18 NPTF	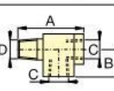
直角管接頭 Elbow 從: From: 到:To: ⅜"–NPTF ⅜"–NPTF		FZ-1610	33	20	⅜"-18 NPTF	–	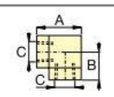
¼"–NPTF ¼"–NPTF		FZ-1638	36	24	¼"-18 NPTF	–	
變徑接頭 Reducer 從: From: 到: To: ⅜"–NPTF ¼"–NPTF		FZ-1630	19	19	¼"-18 NPTF	⅜"-18 NPTF	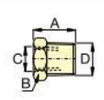
¼"–NPTF ½"–NPTF		BFZ-1630	28	22	¼"-18 NPTF	½"-14 NPTF	
⅜"–NPTF G ¼"		BFZ-16301	19	19	G¼"	⅜"-18 NPTF	
變徑接頭 Adaptor 從: From: 到:To: G¼" ¼"–NPTF		BFZ-16411	35	19	¼"-18 NPTF	G¼"	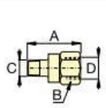
G¼" ⅛"–NPTF		BFZ-16421	31	19	⅛"-27 NPTF	G¼"	
G⅜" ¼"–NPTF		BFZ-16323	43	24	¼"-18 NPTF	G⅜"	
G⅜" ⅜"–NPTF		BFZ-16324	43	24	⅜"-18 NPTF	G⅜"	
變徑接頭 Adaptor 從: From: 到: To: ¼"–NPTF ⅜"–NPTF		FZ-1055	44	23	¼"-18 NPTF	⅜"-18 NPTF	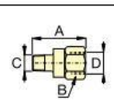
¼"–NPTF ⅛"–NPTF		FZ-1642	30	19	⅛"-27 NPTF	¼"-18 NPTF	
½"–NPTF ⅜"–NPTF		FZ-1634	42	28	⅜"-18 NPTF	½"-18 NPTF	
旋轉接頭 Swivel Fitting 從: From: ⅜"–NPTF 雄 Male 到: To: ⅜"–NPTF 雌 Female		FZ-1660	40	22	⅜"-18 NPTF	⅜"-18 NPTF	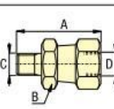

V系列流量控制閥
V Series Flow Control Valves

最大工作壓力:
Maximum Operating Pressure: **700 bar**

- V–152溢流閥限制液壓系統產生的壓力或力。
  The V-152 pressure relief valve limits the pressure or force developed in the hydraulic system.

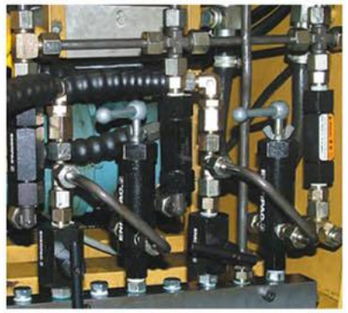

- 所有閥的額定工作壓力均爲700bar
- 所有的接口都帶有NPTF螺紋以防止在額定壓力下泄漏
- 所有的閥均進行防腐蝕塗漆、塗層或電鍍處理
- 密封（V–66NV和V–152NV）適合高溫應用場合，鍍鎳表面提高耐腐蝕能力

- All valves are rated for 700 bar operating pressure
- All valves feature NPTF porting to insure against leakage at rated pressure
- All valves are painted, coated, or plated for corrosion resistance
- seals (in V-66NV and V-152NV) for high temperature applications, nickel-plated for maximum corrosion resistance.

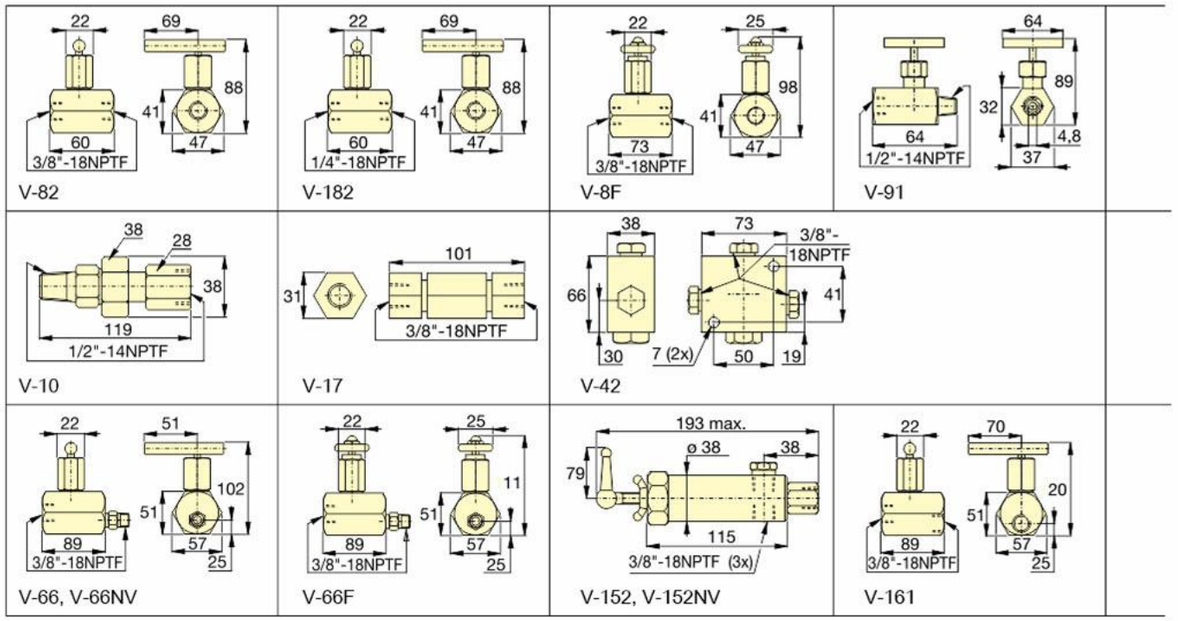

閥類型與型號 Valve Type and Model Number		描述 Description	液壓象徵圖 Hydraulic Symbol
節流閥 Needle Valve V–82 V–182 V–8F		V–82: 控制液壓缸速度。也作爲截止閥用以暫時鎖定負載。⅜ NPTF母接口。 V–182: 與V–82相同，但帶 ¼" NPTF 母接口。也適合于壓力表緩衝閥（同V–82）。 V–8F: 與V–82相似，但測量非常精確，可用于精密流量控制。 V-82:To control cylinder speed.Can also be used as shut-off valve for temporary load holding. ⅜" NPTF female ports. V-182: Same as V-82, but with ¼" NPTF female ports. Also suitable for gauge snubbing (also V-82). V-8F:Like V-82, but with very fine metering for precise flow control. Not recommended as shut-off valve.	
緩衝閥 Snubber Valve V–91		V–91:無限調節測量壓力表的油輸出以防止壓力表指針在負載或壓力突然解除的情況下發生突然折斷。也適合作截止閥在長工作周期應用中保護壓力表。 " NPTF公和母螺紋用于與GA–1、GA–2或GA–4壓力表接頭配合。 V-91:Infinitely adjustable for metering oil out of a gauge to prevent snapping of gauge pointer when load or pressure is suddenly released. Also suitable as shut-off valve to protect the gauge during high cycling applications. ½" NPTF male and female threads for use with GA-1, GA-2 or GA-4 gauge adaptors.	
自動阻尼閥 Auto Damper Valve V–10		V–10: 在長工作周期應用過程中必須監測壓力表壓力時使用。負載突然解除時產生–流動阻力。無需調節 。 ½"NPTF公和母螺紋用于與GA–1、GA–2或GA–4壓力表適配接頭配合。 V-10:To be used when gauge pressure must be monitored during high cycle applications. Creates a flow resis tance when load is released suddenly. No adjus tments are necessary. ½" NPTF for use with GA-1, GA-2 or GA-4 gauge adaptors. male and female threads	
單向閥 Check Valve V–17		V–17: 堅固的結構，防震動，可在低壓降下操作。平穩關閉無衝擊。 ⅜" NPTF母接口 V-17: Ruggedly built to resist shock and operate with low pressure drop. Closes smoothly without pounding. ⅜" NPTF female port.	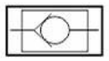
液控單向閥 Pilot Operated Check Valve V–42		V–42: 可以安裝在液壓缸上，在萬一系統失壓的情況下鎖定負載。通常與雙作用液壓缸一起使用，液壓缸上的液壓控制口從液壓缸回路上的三通接頭接受壓力。 ⅜"NPTF母接口先導壓力比爲14%(6.5:1) V-42:Can be mounted at the cylinder to hold the load in case of system pressure loss. Normally used with double-acting cylinders where pilot port receives pressure from a Tee-fitting in the cylinder retract line. ⅜" NPTF female ports. Pilot presure ratio 14% (6,5:1).	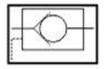
手動操作單向節流閥 Manually Operated Check Valve V–66, V–66NV * V–66F		V–66, V–66NV: 用來與單或雙作用液壓缸一起鎖定負載。液壓缸回程時，手動將閥打開，讓油流回油槽。V–66NV帶密封圈，表面鍍鎳。 V–66F: 與V–66相似，但具有非常精細的用于精密流量控制的測量能力。 V-66, V-66NV:For load holding applications with single and double acting cylinders. Valves allow oil to flow back to tank when cylinder retracts. V-66NV with Viton seals, nickel-plated. V-66F:Similar to V-66, but with very fine metering capability for precise flow control. V-66F is not designed for load holding.	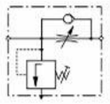
溢流閥 Pressure Relief Valve V–152 V–152NV *		V–152: 限制液壓回路上泵產生的壓力，從而也限制施加在其它元件上的力。當壓力達到預設值時，閥就會打開。欲調高壓力設置，順時針方向旋轉手柄。包括： 0.9m回路軟管套件； ±3%重復精度； 壓力調節範圍55–700bar。 V-152: Limits pressure developed by the pump in hydraulic circuit, thus limiting the force imposed on other components. Valve opens whenever preset pressure is reached. To increase pressure setting, turn handle clockwise. Includes: • 0,9 m return line hose kit, • ± 3% repeatability, • 55-700 bar adjustment range.	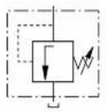
順序閥 Sequence Valve V–161		V–161: 控制至第二回路的油流，當系統壓力低于V–161的設定值，油流被截止。當達到設定壓位時，V–161開啓，油流入第二回路。在第一與第二回路之間總是維持有一壓差。 最小操作壓力：140bar。 V-161:To control oil flow to a secondary circuit. Flow is blocked until system pressure rises to the V-161 setting. When this pressure level is reached, the V-161 opens to allow flow to the secondary circuit. A pressure differential is always maintained between the primary and secondary circuit. Min. operating pressure: 140 bar.